SUNSYS HES L

# SUNSYS HES L©

## Scalable outdoor energy storage system

from 50 kVA / 186 kWh to 550 kVA / 1116 kWh


sunsy_392_a.eps

SUNSYS HES L is outdoor energy storage system designed for both on-grid and off-grid applications. It is available in a variety of configurations, to provide the ideal system size for a range of project requirements.

It supports dedicated applications such as optimization of photovoltaics with self consumption, peak shaving, backup power, and EV charging infrastructure.

Thanks to this, SUNSYS HES L combines the economic returns of on-grid operation with the security of a microgrid when the grid may fail.

### High safety standards

SUNSYS HES L integrates advanced power conversion and LFP battery technologies to create a winning formula.

The B-Cab ( battery storage cabinet) uses liquid-cooled, lithium iron phosphate chemistry, with an integrated fire protection system, and meets the requirements of the latest international fire code.

The complete system is certified to

UL 9540-2020, the safety standard for energy storage systems in both the Canada and the USA.

### Extreme scalability

Based on 2 standard cabinets, SUNSYS HES L is a modular energy storage system that uses 2 standard cabinets to enable 32 UL certified configurations, providing ideal system sizing for a variety of projects. Based on standard equipment and pre-tested configurations, the design, quotation, installation and commissioning process is much faster as a result.

### Fast and safe installation

SUNSYS HES L is supplied with all internal energy modules pre-assembled and plug and play power modules to guarantee maximum quality, the rapid installation and ease of transport.

It includes all cables and hardware to connect the B-Cabs and C-Cabs. The battery cabinets are delivered fully assembled, and include made-to measure cable kits for DC, communication and auxiliary power connections.

### Combines the best technologies

Thanks to a co-design between CATL and Socomec, you can be assured of compatibility between products, and that the complete system has been validated and certified.

The C-Cab (power conversion cabinet) has been designed to include everything required for battery operation, including the management system as well as the power supply.

### The solution for

- Commercial and industrial buildings
- EV charging infrastructure
- Isolated microgrids
- Resilient microgrids
- Renewable energy integration

### Strong points

- High safety standards
- Extreme scalability
- Fast and safe installation
- Combines the best technologies

### Conformity to standards

- **Safety**: UL 9540-2020; UL 9540A; UL 1973; NFPA 855; NFPA 68
- **EMC**: FCC part 15 Level A
- **Environment**: RoHS; REACH, IEC 61249
- **Communication protocol**: Modbus TCP; SunSpec 2.0
- **Grid code**: UL 1741 SB; UL 1741 PCS CRD; IEEE 1547-2018; IEEE 1547.1-2020; CA Rule 21; HECO Rule 14H
- CEC listed; HECO listed

*Please consult us for additional ones.*

### Expert Services

An experienced and skilled team is at your service to make your project a success!

- **Project development**: pre-sales support, project design
- **Deployment**: training, field inspection, pre-commissioning, commissioning
- **Operation**: maintenance contracts, spare parts replacement, remote monitoring
- Cloud data storage
- Extended warranty on both product and performance

*For more information, please contact us.*



socomec
Innovative Power Solutions

# SUNSYS HES L©

Scalable outdoor energy storage system

from 50 kVA / 186 kWh to 550 kVA / 1116 kWh

## Suitable for all of the following applications

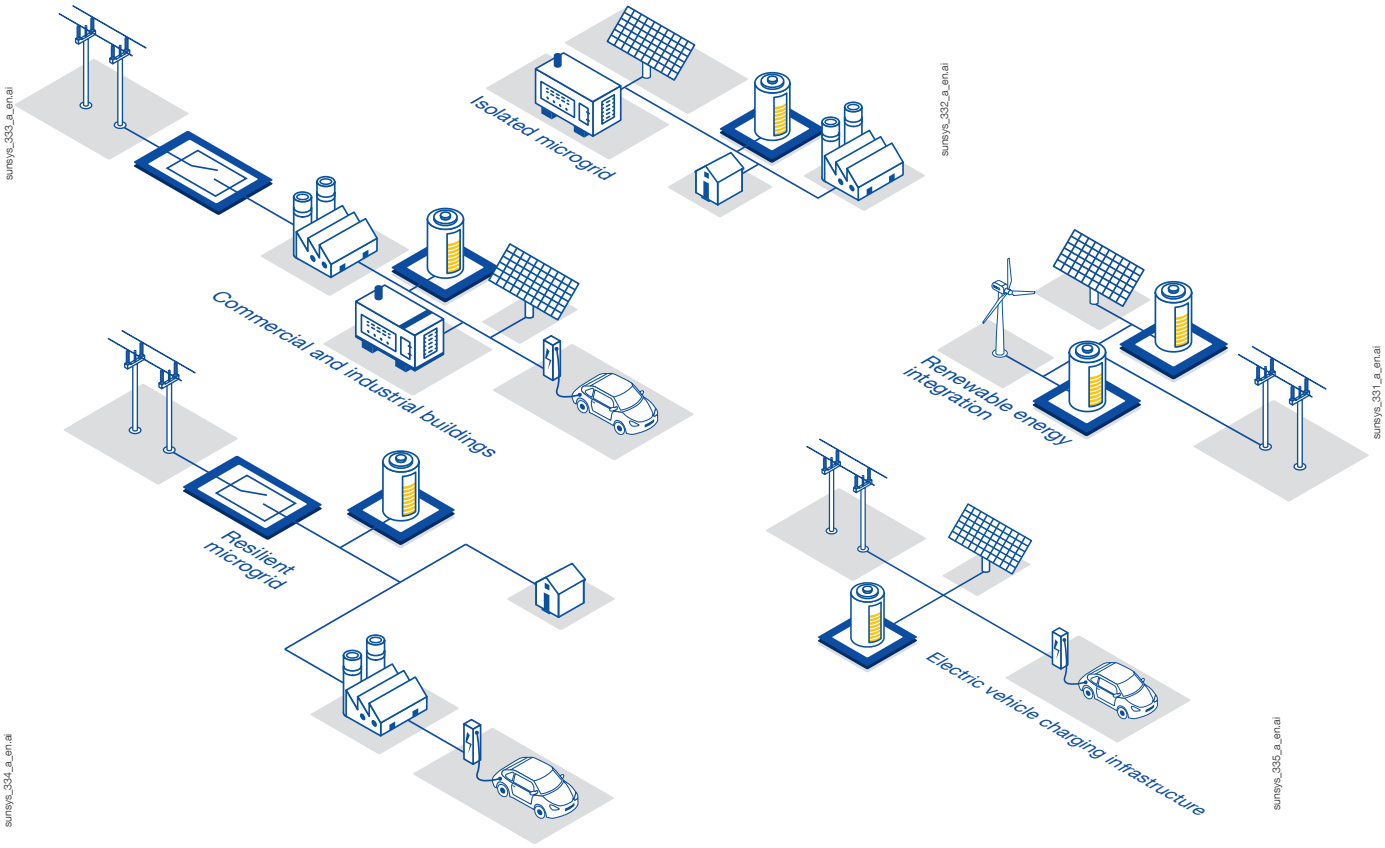


## 2 modular units for maximum flexibility


Up to 1005 kg / 2215 lbs


2280 kg / 5026 lbs

### C-Cab L - Converter Cabinet

- Bidirectional power converter
- 50 to 300 kVA / cabinet
- Automation functions
- AC/DC distribution and protection
- Battery management system
- IoT Ready

### B-Cab L - Battery Cabinet

- Lithium ion battery
- LFP technology
- 186 kWh / rack
- Liquid cooling thermal management
- Integrated fire safety detection and suppression system
- Life cycle of up to 8000 cycles at 25°C; 0.5C

# SUNSYS HES L©

Scalable outdoor energy storage system

from 50 kVA / 186 kWh to 550 kVA / 1116 kWh

## Many system configurations are available to meet customer requirements

| Power (kVA) \ Energy (kWh) | 186 | 372 | 558 | 744 | 930 | 1116 |
|---|---|---|---|---|---|---|
| 50 | 3.4 h | 7.0 h | | | | |
| 100 | 2.0 h* | 3.4 h | 5.3 h | | | |
| 150 | | 2.3 h | 3.4 h | 4.7 h | 5.8 h | |
| 200 | | 2.0 h* | 2.6 h | 3.4 h | 4.4 h | 5.3 h |
| 250 | | | 2.1 h | 2.7 h | 3.4 h | 4.2 h |
| 300 | | | 2.0 h* | 2.3 h | 2.9 h | 3.4 h |
| 350 | | | | 2.0 h | 2.5 h | 2.9 h |
| 400 | | | | 2.0 h* | 2.1 h | 2.6 h |
| 450 | | | | | 2.0 h* | 2.3 h |
| 500 | | | | | | 2.1 h |
| 550 | | | | | | 2.0 h* |

(*) Power derating to respect 0,5 C-RATE

## Maximum savings and fast ROI

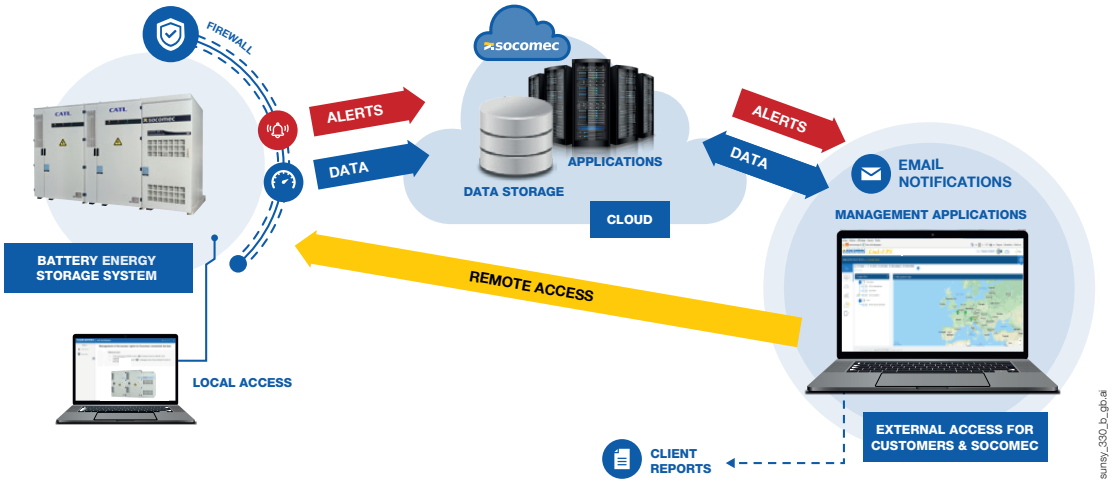


### Local management

The Socomec Power Management System, coordinating the operation of all converter and battery components. It's capabilities include:

This open platform, integrated in the C-Cab, provides access to:

- peak shaving, energy shifting, self-consumption and fuel saving to maximise valuable savings,
- transitions between on-grid and microgrid operation,
- autonomous microgrid management,
- compatibility with 3rd party energy management software suites, through a Sunspec 2.0 or Modbus interface,
- SCADA integration through Modbus/TCP.

### Remote monitoring

In addition, the C-Cab also integrates IoT devices that make it possible to continuously monitor the system remotely.

These devices enable the following, through 2 offers SoLive and SoLive Pro:

- web dashboard for on-line monitoring,
- web access to the system KPIs,
- smartphone app,
- remote firmware upgrade.



socomec Innovative Power Solutions

# SUNSYS HES L©

Scalable outdoor energy storage system

from 50 kVA / 186 kWh to 550 kVA / 1116 kWh

## Technical Data

| | | | | | | |
|---|---|---|---|---|---|---|
| System information | | | | | | |
| Power modularity | 50 kVA power modules - up to 300 kVA | | | | | |
| Symmetrical overload | 110% during 60 min - 125% during 20 min - 150% during 60 s | | | | | |
| Chemistry | LFP - Lithium Iron Phosphate | | | | | |
| Energy Nameplate | 186 kWh per rack | | | | | |
| AC/AC Max Round Trip Efficiency | 90% | | | | | |
| Maximum C-rate | 0.5 C | | | | | |
| Maximum DC current | 82 A charging / 87 A discharging per 50 kVA power module | | | | | |
| Power rating | 50 kW | 100 kW | 150 kW | 200 kW | 250 kW | 300 kW |
| AC rated current | 60 A | 120 A | 180 A | 241 A | 301 A | 361 A |
| AC max. temporary current (overload) | 90 A | 180 A | 271 A | 361 A | 451 A | 541 A |
| AC connections | Up to 4x95mm²/3/0AWG - 3x150mm²/300MCM - 2x185mm²/350MCM | | | | | |
| Rated voltage (Un) | 480 Vac (3ph+N) ±20% | | | | | |
| Rated frequency | 60 Hz ±5% | | | | | |
| Fire protection | Fire Safety System including smoke detectors, heat detectors and aerosol | | | | | |
| Environment | | | | | | |
| Degree of protection | IP 55 / NEMA 3R (Outdoor) | | | | | |
| Operation temperature | -20 to +45 C° / -4 to +113°F without derating - up to +50°C / 122°F with derating | | | | | |
| Storage temperature | -20 to +60 C° / -4 to +140°F | | | | | |
| Acoustic level at 1 m | < 64.8 dB | | | | | |
| Maximum altitude | 1000 m / 3280 ft. without derating (consult us for requirements above this) | | | | | |

## Two system installation options according to the space available on your site

**In-line installation**

Up to 6 B-Cabs - dimensions (mm/in)

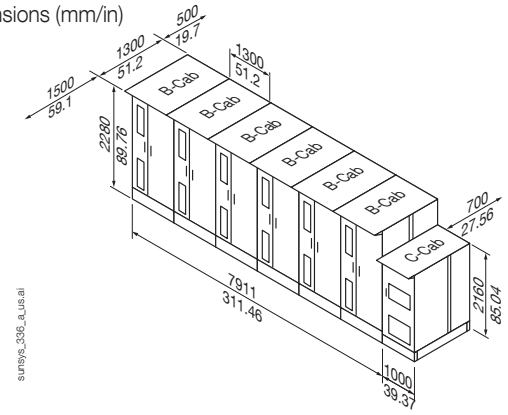


**Back-to-back installation**

Up to 6 B-Cabs - dimensions (mm/in)

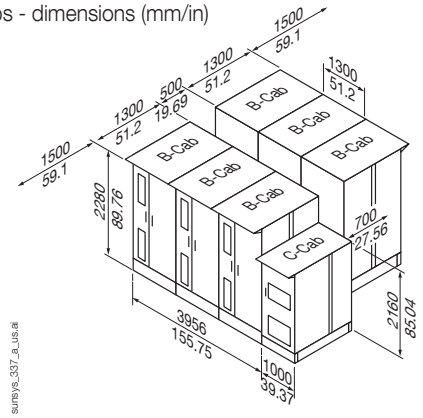


## Also available


sunsy_396.eps

***SUNSYS HES XXL***

High power energy storage system

from 1 MVA / 2 MWh to 6 MVA / 26 MWh systems