DIRIS MCM

Multi-circuit Energy & Power meter for retrofit & sub-metering applications

new

DIRIS MCM-48

Function

The DIRIS MCM is a revenue grade networked Energy & Power sub-meter promoting a simplified approach to retrofit applications, while ensuring safety and code compliance. It has been designed using industrial best practices providing industry leading durability and ease of installation.

The DIRIS MCM supports 333mV output or Rogowski style current sensors. It has been designed with mechanical, electrical and software features that will appeal to those seeking a simplified approach to installation and setup of energy management applications.

Advantages

Increased Safety

The DIRIS MCM is designed to improve installation safety and meets electrical code requirements:

- Built-in optional disconnect provides path to quickly and easily service the meter independently of other circuits.
- mV CT connections, can be connected and disconnected under load.
- No user-direct access to dangerous high voltages, keeping instrumentation engineers safe.
- Retained fasteners, ensuring screws stay securely in place and don't fall inside electrical panels.

Easy installation

- Wall or top cabinet mounting.
- Built-in 1" conduit holes - (3) at the bottom and (3) at the top of the meter.
- Push-in terminals for current sensors, no tools required!
- Clear visible numbering of CT inputs, with color coded terminals that match CT output lead wires.

Easy commissioning

- Configuration with a simple and intuitive PC application via a direct USB connection.
- One IP address and Modbus slave address supports the entire meter, simplifying network integration pain points.
- Patented CT configuration correction algorithm helps eliminate user wiring and setup errors while reducing downtime.

Industrial design

- Aluminum bonded enclosure.
- Internal fuse protection of each hot leg.
- Fuses can be replaced safely for maintenance.

Compact

- The most compact high density multi-circuit meter on the market, in an enclosed format.
- Ideal for retrofitting electrical distribution centers with limited wall space.

General Characteristics

- Accepts 333 mV and Rogowski sensors
- Modbus RTU and TCP communication
- Wireless 915 MHz option
- Class 0.2 accuracy per ANSI C12.1

The solution for

> Commercial buildings
> Retail
> Data centers
> Industrial Buildings

Strong points

> Increased safety
> Easy installation
> Easy commissioning
> Industrial design
> Compact

Compliance with standards

> UL 61010-1
> CSA-C22.2 No 61010-1-12
> ANSI C12.1-2015 Class 0.2
> IEC 62053-22
> IEC 62053-23

Wireless Technology

RF system for wireless communication (915 MHz) of meter data.

RF END-Node
Transmitter

RF HUB-Node
Receiver

socomec
Innovative Power Solutions

DIRIS MCM

Multi-circuit Energy & Power meter

Typical Architecture

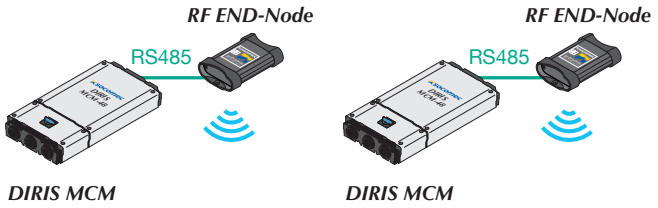

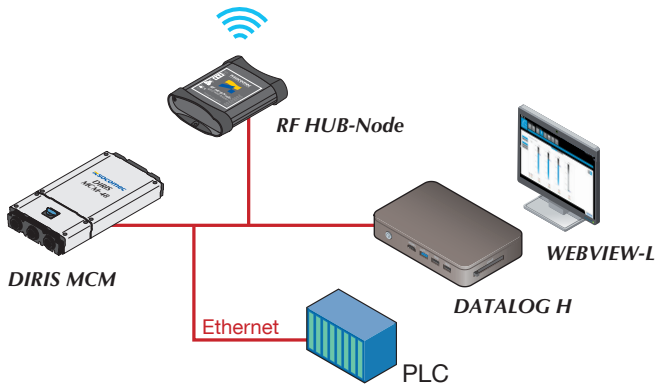

DIRIS MCM

DIRIS MCM power meters have been designed to be networked from different locations throughout a facility or campus environment. The DIRIS MCM supports Modbus protocol using either RS485 or Ethernet communication making compatibility and integration seamless with most EMS/BMS systems.

Need Wireless ?

For isolated metering points where it may be impractical or costly to bring a wired communication bus, the DIRIS MCM has been designed to be plug and play compatible with the RF system for wireless communication (915 MHz) of measurements.

The RF END-Node is connected via RS485 to the power meter (DIRIS MCM) and sends measurement via wireless link to the RF HUB-Node. No external power supply is required, as the END-Node is self-powered by the DIRIS MCM.

Each HUB-Node can communicate wirelessly with up to (8) END-Nodes.

The HUB-Node offers RS485 (Modbus RTU) and Ethernet (Modbus TCP) communication capabilities to any third-party EMS/BMS system.

WEBVIEW software

The DATALOG H80 provides data logging of measurements and the embedded web based application WEBVIEW-L allows to visualize real time and historical measurement data.

Current sensors

Various types of current sensors can be connected to the DIRIS MCM power meter.
Socomec provides a range of split-core and Rogowski flexible sensors which make installation easy with minimum intrusion in retrofit applications.
Our split-core sensors allow to measure up to 600 A, while our Rogowski sensors are ideal for busbar or high current applications up to 4000 A.
Refer to page 4 for references, ratings and window sizes of current sensors.

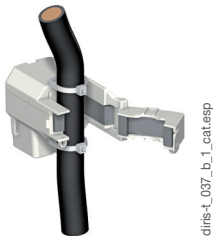

TR-W Split-core
63-600 A

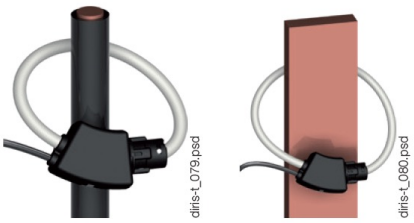

ROG Rogowski
Up to 4000 A

Features

DIRIS MCM 48	
Energy metering	
+/- kWh, +/- kvarh, kVah	•
Demand	•
Multi-measurement	
Volts (L-N & L-L)	•
Frequency	•
Amps (per phase and system average)	•
P (kW), Q (kvar), S (kVA) (per phase and Total)	•
PF (per phase and system average)	•
Communication	
Modbus RTU - RS485	•
Modbus TCP - Ethernet	•
Wireless	o

o: via optional RF system

Technical characteristics

Electrical characteristics	
Voltage measurement input	90-277 VAC L-N, 480 VAC L-L, CAT III (600V coming soon)
Voltage connections	12...14 #AWG
Frequency	50 / 60 Hz
Power supply	- Line powered (any two lines 120 - 480 VAC), - 5VDC 500 mA from USB port (offline configuration mode)
Current inputs	- 333mV output sensors - Rogowski coil sensors (131mV / kA @ 60Hz)
CT connections	12...22 AWG 600 VAC
Measurement characteristics	
Voltage accuracy	Class 0.1
Current accuracy	Class 0.1 ANSI C12.20
Power and Energy accuracy	Class 0.2 ANSI C12.20
Power Factor accuracy	Class 0.2 ANSI C12.20
Communication characteristics	
Ethernet RJ45 10/100 Mbs	Modbus TCP MQTT data push
RS485	Modbus RTU
USB Type B	Configuration or firmware upgrade
Mechanical characteristics	
Enclosure material	- Extruded anodized aluminium body - Glass filled nylon end caps
Mounting	Wall mounting (2 or 3 fastener locations)
Protection Rating	IP40
Conduit connections	Sized for 1-inch EMT conduit connection
Environmental characteristics	
Operating temperature	-4 ... +140°F / -20 ... +60°C
Storage temperature	-13 ... +158°F / -25 ... +70°C
Operating humidity	5% to 95% non-condensing
Operating altitude	< 6560 ft / 2000 m

Dimensions (in/mm)

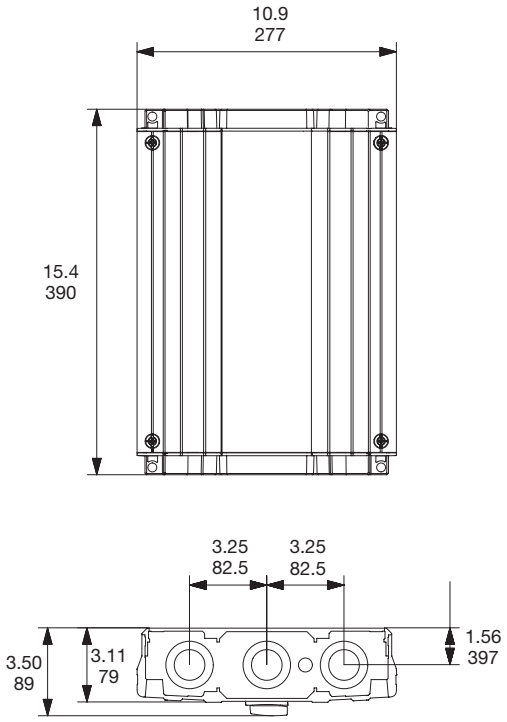

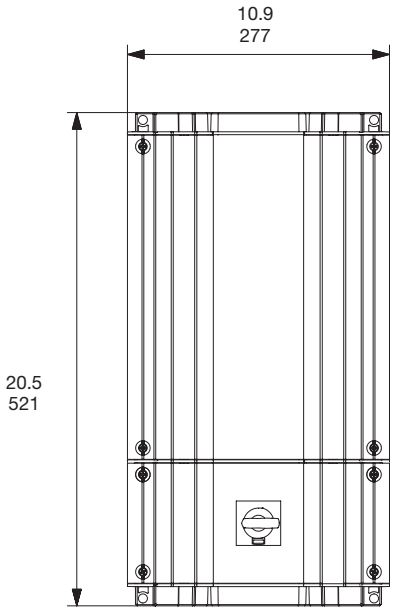

DIRIS MCM

Multi-circuit Energy & Power meter

References

Enclosed Meter	Description	Reference
DIRIS MCM-48	Enclosed 48-circuit meter without disconnect switch	4827 **0548**
DIRIS MCM-48	Enclosed 48-circuit meter with disconnect switch	4827 **0549**

Split-core current sensors	Rating (A)	Window (in/mm)	Output Lead Length	Reference
TR-10W	63	Ø 0.39 / 10	22 ft / 7 m	194S **5010**
TR-14W	160	Ø 0.55 / 14	22 ft / 7 m	194S **5014**
TR-21W	250	Ø 0.83 / 21	22 ft / 7 m	194S **5021**
TR-32W	600	Ø 1.26 / 32	22 ft / 7 m	194S **5032**
Rogowski current sensors	**Output Signal**	**Window (in/mm)**	**Output Lead Length**	**Reference**
ROG-80	131mV / kA @ 60Hz	Ø 3.15 / 80	22 ft / 7 m	194S **1080**
ROG-120	131mV / kA @ 60Hz	Ø 4.72 / 120	22 ft / 7 m	194S **1120**
ROG-200	131mV / kA @ 60Hz	Ø 7.87 / 200	22 ft / 7 m	194S **1200**
ROG-300	131mV / kA @ 60Hz	Ø 11.81 / 300	22 ft / 7 m	194S **1300**

Wireless System (*)	Description	Reference
RF END-Node	Wireless End-Node with RS485 input (one RF END-Node per DIRIS MCM)	4899 **0800**
RF HUB-Node	Wireless Hub-Node; Ethernet output (supports up to 8 RF END-Node)	4899 **0801**

(*) Refer to RF catalog pages for more information

Expert Services

Our service engineers are an essential part of our team, and they are dedicated to ensuring your power monitoring system provides accurate and reliable measurements to your EPMS software or SCADA system.

Our services include:

- Site audits to verify the proper wiring of your system
- Personnel training on how to configure, operate and maintain power monitoring equipment and associated software
- Remote and on-site commissioning to ensure that your system is up and running quickly, with peace of mind.

For further information, please contact your nearest SOCOMEC branch.