SUNSYS HES XXL©

High power energy storage system

from 1 MVA / 2 MWh to 6 MVA / 26 MWh systems

sunsy_396.eps

SUNSYS HES XXL is a complete and ready to use outdoor high power energy storage system for on-grid and off-grid applications. It supports dedicated applications such as optimization of photovoltaics with self-consumption, peak shaving, backup power and EV charging infrastructure.

This system is based on standard cabinets: a converter cabinet C-Cab XXL, a battery cabinet B-Cab XXL (CATL) and a master control cabinet (M-Cab) enabling a large variety of configurations in a simple and safe way.

It is perfectly adapted to large scale commercial and industrial installations as well as front of the meter projects.

High safety

SUNSYS HES XXL integrates advanced power conversion and LFP battery technologies to create a winning formula.

The B-Cab (battery storage cabinet) uses liquid-cooled, lithium iron phosphate chemistry, with an integrated fire protection system, and meets the requirements of the latest international fire code.

The complete system is certified to UL 9540 3rd edition, the safety standard for energy storage systems in both Canada and the USA.

Extreme scalability

Large variety of system configurations are available based on two standard cabinets:
* a 1.3 MVA or 1.5 MVA C-Cab converter cabinet
* a 407 kWh B-Cab battery cabinet

While putting up to 4 systems in parallel it is possible to reach 6 MVA / 26 MWh on a single transformer.

Fully bankable supplier

Socomec is a 100-year old company with expert knowledge in power conversion, switching and monitoring.

With our energy storage experience of more than 10-years and more than 360 systems installed worldwide, we have proven our knowledge and support process on the field.

Integrated ready to use certified system

SUNSYS HES XXL systems, including; converter, batteries and the control cabinets all together, are certified and tested.

In addition, a software adapted to enable internal communication between all cabinets has been specifically developed.

The solution for

- Large commercial and industrial buildings
- EV charging infrastructure
- Grid support
- Solar colocation among which solar communities

Strong points

- High safety
- Extreme scalability
- Fully bankable supplier
- Integrated ready to use certified system

Conformity to standards

- **Safety:** UL 9540-2020; UL 9540A; UL 1973; NFPA 855; NFPA 68
- **EMC:** FCC part 15 Level A
- **Environment:** RoHS; REACH
- Communication protocol: Modbus TCP; SunSpec 2.0
- **Grid code:** UL 1741 SB; UL 1741 PCS CRD; IEEE 1547-2018; IEEE 1547.1-2020; CA Rule 21; HECO Rule 14H
- CEC listed

Please consult us for additional standards.

Expert services

An experienced and skilled team is at your service to make your project a success, providing optimised asset management and performance!

- **Project development:** pre-sales support, project design
- **Deployment:** training, field inspection, pre-commissioning, commissioning
- **Operation:** maintenance contracts, spare parts replacement, remote monitoring.
- Cloud data storage
- Extended warranty on both product and performance

For more information, please contact us.

socomec
Innovative Power Solutions

SUNSYS HES XXL©

High power energy storage system

from 1 MVA / 2 MWh to 6 MVA / 26 MWh systems

Suitable for all of the following applications

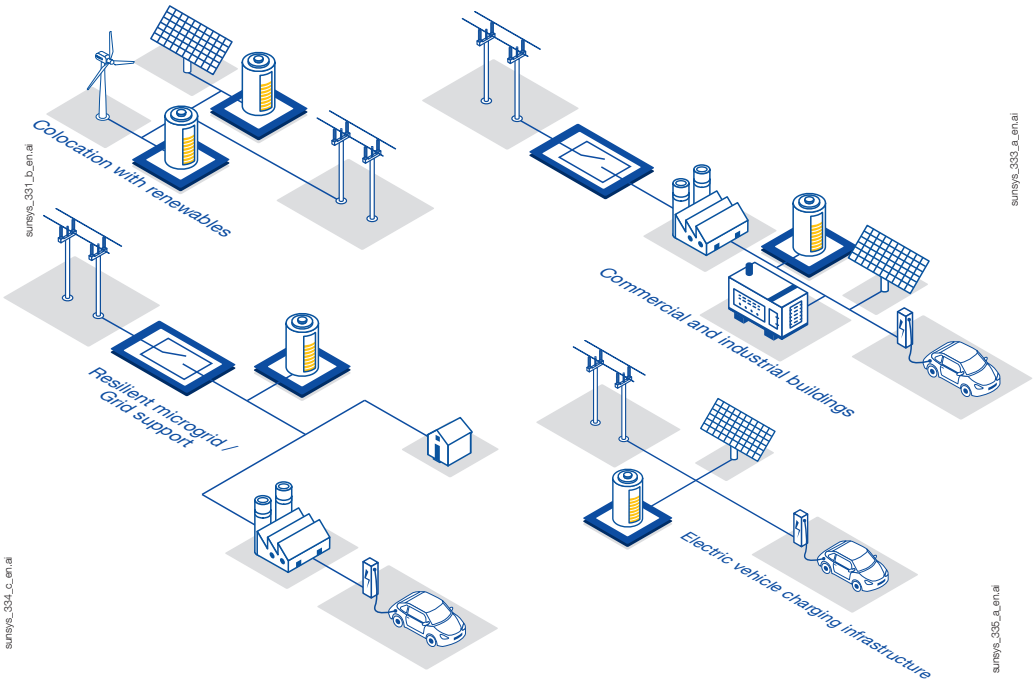

Typical functions enabled by our system in Grid infrastructure support

- Frequency regulations
- Capacity reserve
- Trading on Day-ahead, Intraday and Balancing markets
- Other services that might be required by the Grid operator

3 modular units for maximum flexibility

(W x D x H): 1000 x 1636 x 2281 mm
39.37 x 64.41 x 89.80 in
1360 kg / 3000 lbs

(W x D x H): 1300 x 1300 x 2280 mm
51.2 x 51.2 x 89.76 in
3550 kg / 7827 lbs

(W x D x H): 894 x 1046 x 2000 mm
35.2 x 41.18 x 78.74 in
300 kg / 611 lbs

C-Cab XXL Converter Cabinet

- Bidirectional power converter
- 1.5 MVA / cabinet
- Hybrid liquid / air cooling system
- On-grid and off-grid operation

B-Cab XXL Battery Cabinet

- Lithium ion battery
- LFP technology
- 407 kWh / rack
- Liquid cooling thermal management
- Integrated fire safety detection and suppression system

M-Cab XXL Master Cabinet

- ESS control cabinet
- Integrated battery management system
- Remote management
- Auxiliaries power supply
- Automation functions and EMS connection
- Battery data logging

SUNSYS HES XXL©

High power energy storage system

from 1 MVA / 2 MWh to 6 MVA / 26 MWh systems

Many system configurations are available to meet customer requirements

1 C-CAB - 600 to 690 V

Power (kVA) \ Energy (kWh)	1 629	2 037	2 444	2 851	3 259	3 666	4 073	4 481	4 888	5 295	5 703	6 110	6 517
750	2.0 h	2.5 h	3.0 h	3.5 h	4.1 h								
1 000			2.3 h	2.6 h	3.0 h	3.4 h	3.8 h	4.2 h					
1 250				2.1 h	2.4 h	2.7 h	3.0 h	3.3 h	3.6 h	3.9 h	4.3 h		
1 500					2.0 h	2.3 h	2.5 h	2.8 h	3.0 h	3.3 h	3.5 h	3.8 h	4.1 h

2 C-CAB - 690 V

Power (kVA) \ Energy (kWh)	4 888	5 703	6 517	7 332	8 147	8 961	9 776	10 591	11 406	12 220	13 035
2 000	2.3 h	2.6 h	3.0 h	3.4 h	3.8 h	4.2 h					
2 500		2.1 h	2.4 h	2.7 h	3.0 h	3.3 h	3.6 h	4.0 h			
3 000			2.0 h	2.3 h	2.5 h	2.8 h	3.0 h	3.3 h	3.5 h	3.8 h	4.1 h

3 C-CAB - 690 V

Power (kVA) \ Energy (kWh)	9 776	10 998	12 220	13 442	14 664	15 886	17 108
4 000	2.3 h	2.5 h	2.8 h	3.1 h	3.4 h	3.7 h	4.0 h

4 C-CAB - 690 V

Power (kVA) \ Energy (kWh)	13 035	14 664	16 294	17 923	19 552	21 182	22 811	24 440	26 070
6 000	2.0 h	2.3 h	2.5 h	2.8 h	3.0 h	3.3 h	3.5 h	3.8 h	4.1 h

SUNSYS HES XXL system architectures

Architecture with 1 C-Cab

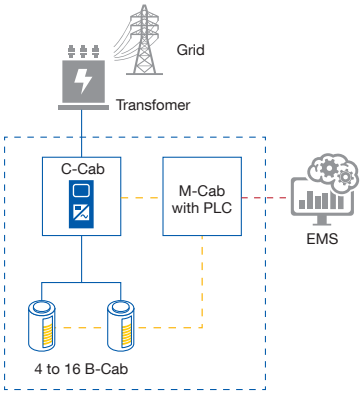

Architecture with 4 C-Cabs

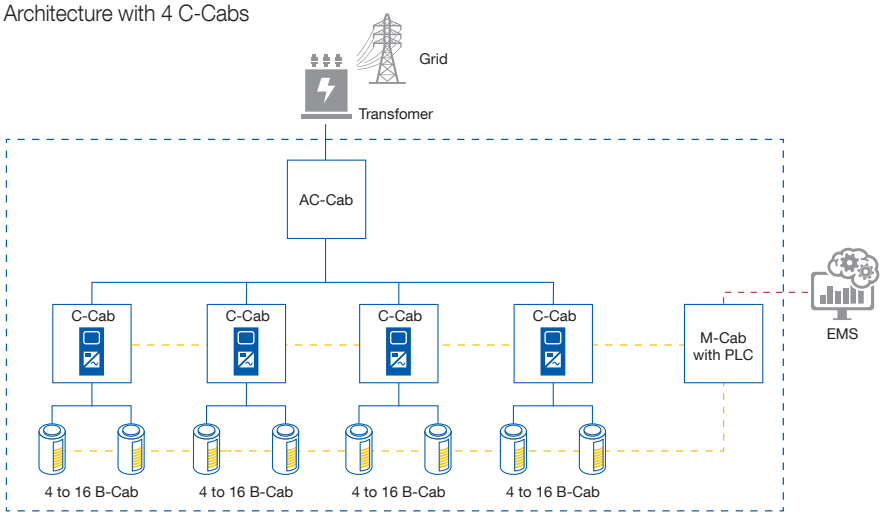

sunsy_405_b_us.ai

Power connection — Power management by PLC — Connecting to external EMS — Provided by Socomec

Technical Data

System information	
Power modularity	1.3 MVA @ 600 Vac or 1.5 MVA @ 690 Vac per C-Cab
Chemistry	LFP - Lithium Iron Phosphate
Energy Nameplate	407.3 kWh per cabinet
AC/AC Max Round Trip Efficiency	higher than 90%*
Maximum C-rate	0.5C
AC connections	6 x 300 mm² 3-wire
AC Voltage range	600-690 VRMS +/-10%
Rated frequency	60 Hz configurable
Fire protection	fire safety system including smoke detectors, heat detectors and aerosol in the B-Cab
Environment	
Environment installation	Outdoor
Degree of protection	IP 55
Operation temperature	-20 to 45 C° ; -4 to +113°F without derating
Acoustic level at 3 m	< 75 dBA @ 3m
Altitude max.	2000 m / 6560 ft. without derating (consult us for requirements above this)

energy consumption of the auxiliairies is not taken into account

Also available

sunsy_392.eps

SUNSYS HES L

Outdoor Energy Storage System

from 50 kVA / 186 kWh to 550 kVA / 1116 kWh systems