INSTALLATION AND OPERATING MANUAL

MODULYS GP

Green Power 2.0 range

100 kW UL

EN

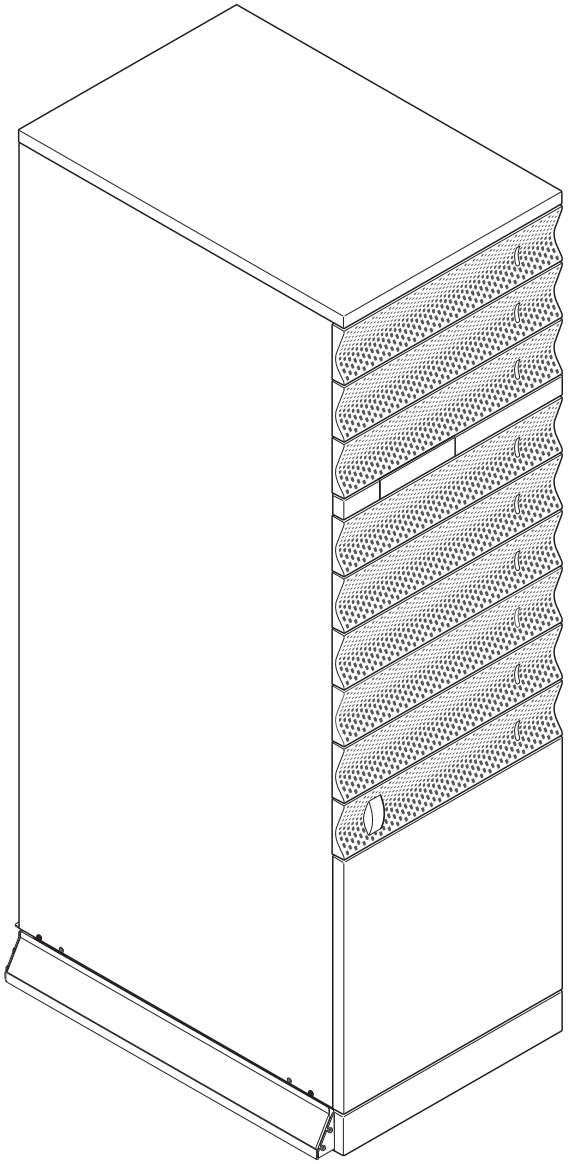

www.socomec.com

socomec
Innovative Power Solutions

CONTENTS

1. SAFETY STANDARDS 5
1.1 IMPORTANT SAFETY INSTRUCTION . . . 5
1.2 DESCRIPTION OF SYMBOLS . . . 6
1.3 ABBREVIATIONS . . . 7
2. ENVIRONMENTAL REQUIREMENTS AND HANDLING 8
2.1 ENVIRONMENTAL REQUIREMENTS. . . . 8
2.2 HANDLING . . . 9
3. ELECTRICAL INSTALLATION 10
3.1 ELECTRICAL REQUIREMENTS . . . 10
3.2 CABLE POSITIONING . . . 12
4. OVERVIEW 13
5. CONNECTIONS 15
5.1 EXTERNAL BATTERY CONNECTION . . . 17
5.2 POWER AND BYPASS MODULE INSERTION . . . 18
6. CONTROL PANEL 23
7. DISPLAY OPERATION 26
7.1 DISPLAY DESCRIPTION . . . 26
7.2 MENU ARCHITECTURE. . . . 27
7.3 FUNCTIONING MODE . . . 31
7.4 STATUS . . . 31
7.4.1 STATUS PAGE . . . 31
7.5 ALARMS MANAGEMENT. . . . 32
7.5.1 ALARM REPORT . . . 32
7.5.2 ALARM POPUP . . . 32
7.5.3 ALARM PAGE. . . . 32
7.6 SYNOPTIC ANIMATION. . . . 33
7.6.1 ADDITIONAL ICONS . . . 36
7.7 EVENT LOG PAGE . . . 36
7.8 MENU FUNCTION DESCRIPTIONS. . . . 37
7.8.1 ENTERING PASSWORDS . . . 37
7.8.2 MONITORING MENU . . . 37
7.8.3 EVENTS LOG MENU . . . 37
7.8.4 MEASUREMENTS MENU . . . 37
7.8.5 CONTROLS MENU . . . 37
7.8.6 UPS CONFIGURATION MENU . . . 38
7.8.7 USER PARAMETERS MENU . . . 38
7.8.8 SERVICE MENU . . . 38
7.9 ADDITIONAL USER FUNCTIONS . . . 39
7.9.1 PHASE COLOR MODIFICATION . . . 39
8. OPERATING PROCEDURES 40
8.1 SWITCHING ON . . . 40
8.2 SWITCHING OFF . . . 40
8.3 BYPASS OPERATIONS . . . 40
8.4 EXTENDED OUT OF SERVICE. . . . 41
8.5 EMERGENCY SHUTDOWN . . . 41
9. OPERATING MODES 42
9.1 ON LINE MODE . . . 42
9.2 HIGH EFFICIENCY MODE . . . 42
9.3 OPERATION WITH MOTOR GENERATOR (GENSET). . . . 42
10. STANDARD FEATURES AND OPTIONS 43
10.1 ADC+SL CARD. . . . 44
10.1.1 TEMPERATURE SENSOR . . . 47
10.2 NET VISION CARD. . . . 48
10.2.1 EMD . . . 48
10.3 LI-ION BATTERY INTERACTIVITY KIT. . . . 48
10.4 TOP AIR EXHAUSTED . . . 48
11. TROUBLESHOOTING 49
11.1 SYSTEM ALARMS . . . 49
11.2 SYSTEM STATUS . . . 50
12. PREVENTIVE MAINTENANCE 51
12.1 BATTERIES. . . . 51
12.2 FANS & CAPACITORS . . . 51
13. SAFEGUARDING THE ENVIRONMENT 52
14. TECHNICAL SPECIFICATIONS 53

SOCOMEC retains the full and exclusive ownership rights to this document. Only a personal entitlement to use the document for the application indicated by SOCOMEC is granted to the recipient of this document. The reproduction, modification, distribution of this document, either partially or wholly and in any manner, is strictly prohibited except upon Socomec's express prior written consent.

This document is not a specification. SOCOMEC reserves the right to make any changes to the information provided without prior notice.

1. Safety standards

1.1 Important safety instruction

SAVE THIS INSTRUCTION - This manual contains important instructions for models M4-S-100-HCA0, M4-S-100-HCA0-T and options, that should be followed during installation and maintenance of the UPS and batteries.

This manual should be kept carefully in a safe place near the UPS, so that it can be consulted by the operator at any time for any information that may be needed regarding correct use of the unit. Read the manual carefully before connecting the unit to the a.c. mains supply and to the downstream appliances. Before the UPS is put into commission, the user must be perfectly familiar with its operation, with the position of all the controls and with the technical and functional characteristics of the unit, so as to ensure there will be no risk to any persons or to the appliance itself.

⚠	NOTE! Any work carried out on the equipment must be performed by skilled, qualified technicians.
⚠	DANGER! Failure to observe safety standards could result in fatal accidents or serious injury, and damage equipment or the environment.
⚠	CAUTION! If the unit is found to be damaged externally or internally, or any of the accessories are damaged or missing, contact SOCOMEC. Do not operate the unit if it has suffered a violent mechanical shock of any kind.
⚠	NOTE! Install the unit in accordance with clearances in order to prevent access to handling devices and guarantee sufficient ventilation (refer to 'Environmental requirements' chapter).
⚠	NOTE! Only use accessories recommended or sold by the manufacturer.
⚠	NOTE! When the equipment is transferred from a cold to a warm place wait approx. two hours before putting the unit into operation.
⚠	Avoid exposing the UPS to contact with water or any liquids generally. Do not insert foreign objects into the cabinet.
⚠	WARNING! Connect the protective earth (PE) conductor before making any other connections.
⚠	The wiring methods in accordance with the National Electrical Code, ANSI/NFPA 70 and Canadian Electric Code (CEC) are to be used. All national standards applicable to batteries must be observed.
⚠	CAUTION! To reduce the risk of fire, connect only to a circuit provided with 200 amperes maximum branch-circuit overcurrent protection in accordance with the National Electrical Code, ANSI/NFPA 70.
⚠	DANGER! RISK OF ELECTRIC SHOCK! Before carrying out any operations on the unit (cleaning and maintenance performances, connection of appliances, etc.) disconnect all power sources.
⚠	DANGER! RISK OF ELECTRIC SHOCK! After disconnecting all power sources wait approx. 5 minutes for the complete discharge of the unit.
⚠	NOTE! Any use other than the specified purpose will be considered improper. The manufacturer/supplier shall not be held responsible for damage resulting from this. Risk and responsibility lies with the system manager.

- Use the UPS in accordance with the technical specifications indicated in this manual (chapter 'Operating modes').
- A specific input with remote EPO (Emergency Power Off) is available.
- In the event that the equipment has no automatic backfeed protection contactor device, make certain that:
  - the user/installer attaches warning labels to all mains isolating switches located remotely from the area where the UPS is sited, in order to inform service personnel that the circuit is connected to a UPS.
  - an external isolating device is installed.

⚠	CAUTION The user is cautioned that any changes or modifications not expressly approved by Socomec could void the user's authority to operate the equipment.
⚠	IMPORTANT!: This equipment has been tested and found to comply with the limits for a Class A digital device, pursuant to part 15 of the FCC Rules. These limits are designed to provide reasonable protection against harmful interference when the equipment is operated in a commercial environment. This equipment generates, uses, and can radiate radio frequency energy and, if not installed and used in accordance with the instruction manual, may cause harmful interference to radio communications. Operation of this equipment in a residential area is likely to cause harmful interference in which case the user will be required to correct the interference at his own expense.

NOTE! The product you have chosen is designed for commercial and industrial use only. In order to be used for particular critical applications such as life support systems, medical applications, commercial transportation, nuclear facilities or any other application or system where product failure is likely to cause substantial harm to people or property, the products may have to be adapted. For such uses we would advise you to contact SOCOMEC beforehand to confirm the ability of these products to meet the requested level of safety, performance, reliability and compliance with applicable laws, regulations and specifications.

1.2 Description of symbols

All interior and exterior precautions and warnings on labels and plates on the equipment should be complied with.

MET c us	UL 1778; CSA-C22.2 NO.107.3-05; MET file E114654		The electrolyte corrodes metals and burns the skin and all parts of the human body.
5 min.	Waiting time before operating		WARNING! Risk of explosion! Avoid short circuits! Never place tools or metal objects on the accumulators.
	DANGER! High voltage (black/yellow)		Wear safety goggles and suitable clothing.
	Protective earth terminal (PE)		Read the user instructions carefully. Read the user manual before performing any operations.
	Read the user manual before using the unit		Wear protective gloves and clothing.
	It is forbidden for non-qualified personnel to work on the batteries.		In the event of contact with the eyes, wash immediately with plenty water and call a doctor. Call a doctor immediately in the event of accidents or illness.
	Do not smoke, use naked flames or generate sparks in the vicinity of the accumulators.		The unit MUST be handled by at least two people.
	Accumulators are heavy! Use suitable transport and lifting equipment to work safely.	Pb	Batteries and related parts contain lead. Lead is dangerous to health if ingested. Wash hands after handling!
	Connecting accumulators in series creates hazardous voltages.		

We advise you to contact SOCOMEC beforehand to confirm the ability of these products to meet the required level of safety, performance, reliability and compliance with applicable laws, regulations and specifications.

1.3 Abbreviations

For the purpose of this document, the following abbreviations are used:

BMS	Battery Management System
EMC	Electro Magnetic Compatibility
HMI	Human Machine Interface
IEC	International Electrotechnical Commission
IMD	Insulation Monitoring Device
LIB	Li-Ion battery
MBMS	Master BMS
PE	Protective Earth
SOC	State of Charge
SOH	State of Health
SPD	Surge Protection Device
THDI	Total Harmonic Distortion in Current
THDV	Total Harmonic Distortion in Voltage
UPS	Uninterruptible Power Supply

2. Environmental requirements and handling

NOTE!
Before carrying out any operations on the unit read the 'Safety standards' chapter carefully.

2.1 Environmental requirements

The room must be:

- of a suitable size
- free from conductive, inflammable and corrosive items;
- not exposed directly to sunlight.

The floor must support the weight of the unit and guarantee its stability. The unit is designed for indoor installation only.

- Check that the UPS will not be installed in a dusty environment.

ROOM POSITIONING

Top view: rear air outlet

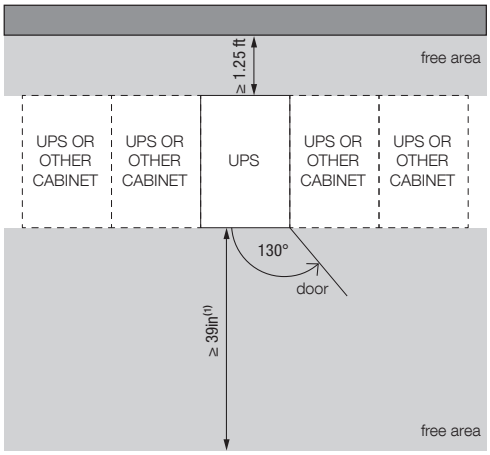

Top view: top air outlet(2)

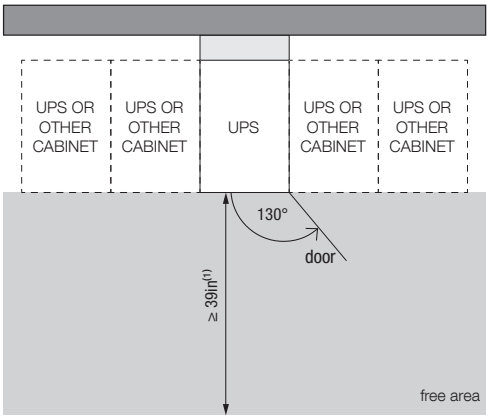

Front view: rear or top air outlet

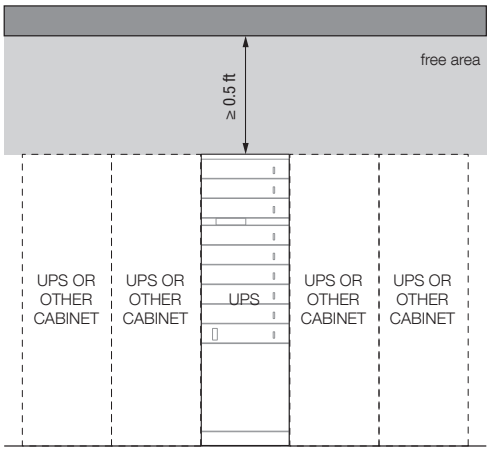

1. *Minimum service clearance. 5 ft are suggested for easy extraction and installation of battery and power modules. Please refer to local standards for details.*
2. *This configuration is possible only with top air-exhaust option. See 'Standard features and options' chapter.*

IN-ROW CONFIGURATION

Top view	Front view
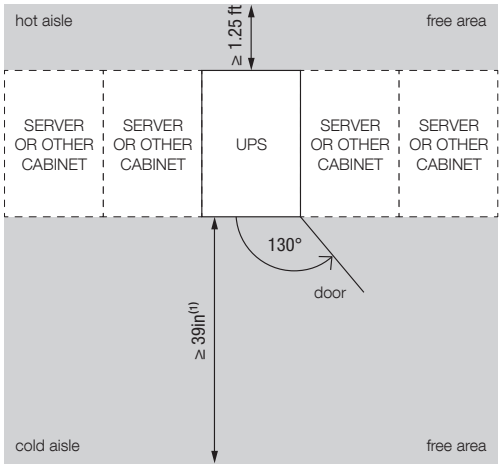	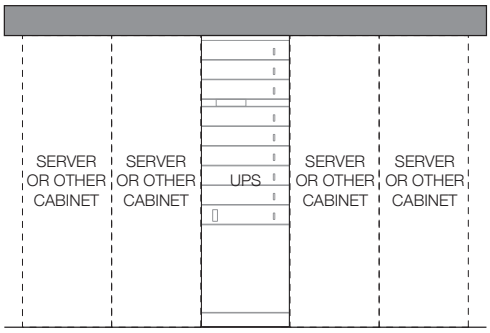

1. *Minimum service clearance. 5 ft are suggested for easy extraction and installation of battery and power modules. Please refer to local standards for details.*

2.2 Handling

- The packaging guarantees the stability of the unit during shipping and physical transfer.
- The unit must remain in a vertical position during all shipping and handling operations.
- Ensure that the floor is strong enough to support the weight of the unit.
- Carry the packaged unit as close as possible to the installation site.

⚠	WARNING! HEAVY WEIGHT! Move the unit using a fork lift truck taking the utmost caution at all times.
⚠	The unit MUST be handled by at least two people. The people MUST take position at the sides of the UPS with respect to the direction of movement.
⚠	Do not move the unit by putting pressure on the front door.
⚠	When moving the unit on even slightly sloping surfaces, use the locking equipment and braking devices to ensure that the unit does not fall over.
⚠	WARNING! The following instructions must be carried out prior to moving the unit (after initial positioning). Failure to heed this warning could result in the unit falling over, equipment damage, injury and even death
⚠	WARNING! RISK OF TIPPING OVER! The six feet must be secured evenly to ensure the unit is stable.

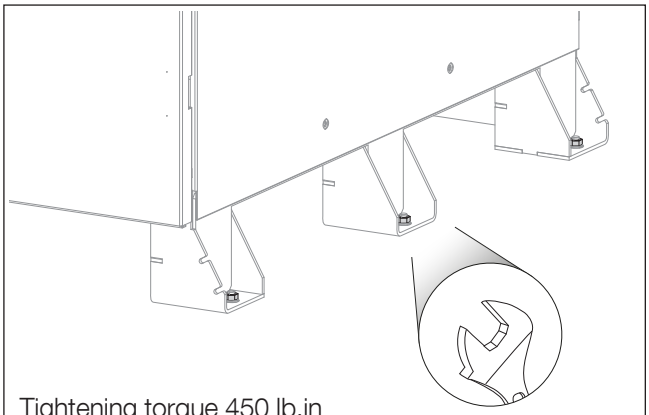

Tightening torque 450 lb.in

Recommended diameter of screws 5/8"

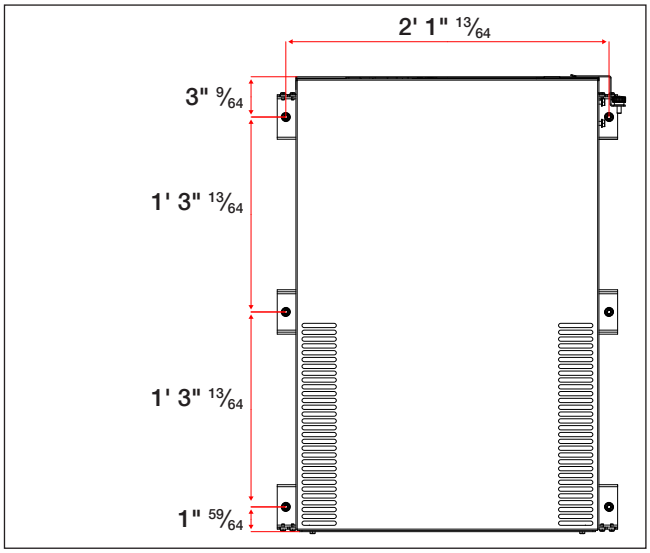

3. Electrical installation

⚠	NOTE! **Before carrying out any operations on the unit read the 'Safety standards' chapter carefully**

3.1 Electrical requirements

The installation and system must comply with national plant regulations.

The electrical distribution panel must have a sectioning and protection system installed for input mains.

If a RCD is required a B-type should be used.

The short circuit current (Icw) according to UL1778 is 10 kA rms.

In case of installation with higher prospective short circuit current, the upstream circuit should be provided with specific OCPD, i.e. UL489 current limiting MCCB or UL248 current limiting fuses, or proper additional impedance (transformer or inductance).

Cables and input protection devices							
Model rating	Breaker Input[1]	RCD input[2]	Input/Output cable size		Battery cable core size		Type of cable
(kVA)	(A)	(A)	(mm^2)		(mm^2)		
	Max	Min	Min	Max[4]	Min	Max[4]	
100	200	0.5	1/0 AWG	4/0 AWG	2/0 AWG	4/0 AWG	AWG, 75°C [3]

Tightening torque		
AWG	Tightening torque[5]	
	lb-in	Nm
1/0 - 2/0	20.3	180
3/0 - 4/0	28.2	250

1. *3P Circuit breaker switch recommended with magnetic intervention threshold ≥10 In (curve D). The min value depends on the size of the power cables in the installation, while the max value is limited by the UPS cabinet. Use only multipolar overcurrent protection devices (no fuses).*
2. *Caution! Use type B four-pole selective (S) residual current detectors. Load leakage currents are to be added to those generated by the UPS and during transitory phases (power failures and power returns) short current peaks may occur. If loads with high leakage current are present, adjust the residual current protection. It is advisable in all cases to carry out a preliminary check on the earth current leakage with the UPS installed and operational with the definitive load, so as to prevent the RCD tipping over.*
3. *Use tin plated copper lugs.*
4. *Determined by the size of the terminals.*
5. *According UL486 AB.*

⚠	CAUTION! **To reduce the risk of fire, connect only to a circuit provided with 200 A maximum branch circuit overcurrent protection in accordance with the National Electrical Code, ANSI/NFPA 70 and the Canadian Electrical Code, Part I, C22.1.**
⚠	**The UPS is designed for transient overvoltages in category II installations. If the UPS is part of the building's electrical circuit, or is likely to be subject to transient overvoltages in category III installations, additional external protection must be provided, either on the UPS or in the AC power supply network powering the UPS.**
⚠	WARNING! **Protective earthing conductor (PE) must have sufficient current-carrying capacity. The PE cable core size must be chosen according to the PROTECTIVE CURRENT RATING of the earth circuit which depends on the provision and location of protective overcurrent devices.**

Backfeed protection

The UPS is set up for the installation of external protection devices against the backfeed of dangerous voltages on the auxiliary backup mains power supply line (AUX MAINS SUPPLY). The current rating of the switching device has to follow the instruction outlined in chapter 'Electrical requirements'.

⚠	DANGER! RISK OF ELECTRIC SHOCK! **The installer must attach the warning label in order to warn electrical technicians about dangerous backfeed situations (not caused by the UPS)**

Warning label (supplied with the equipment)	Backfeed electrical diagram
Before working on this circuit - Isolate the Uninterruptible Power System (UPS) - Then check for Hazardous Voltage between all terminals including the protective earth **Risk of Voltage Backfeed**	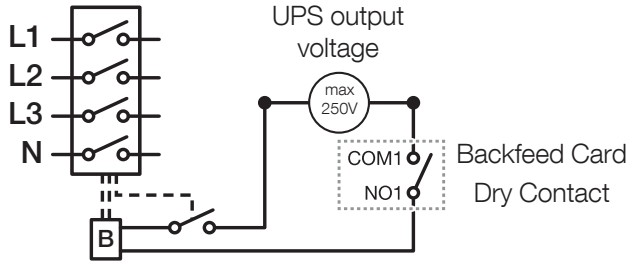

Backfeed card

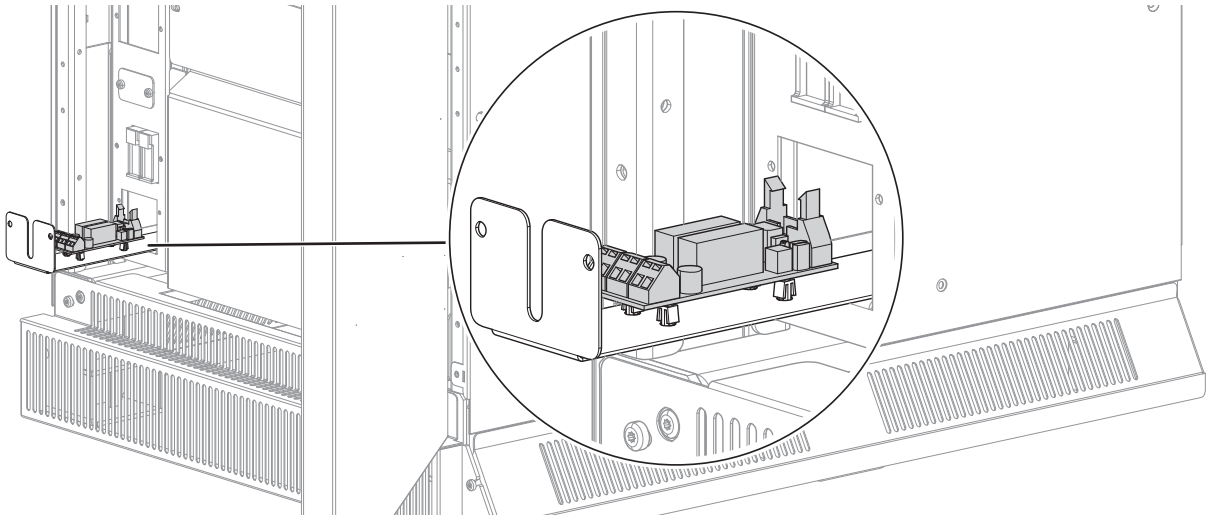

⚠	NOTE! **Use a 220-240 V release coil with integrated travel limit contact to pilot the input protection systems. If a trip coil without an integrated end-of-travel contact is used, an early auxiliary contact must be added (see figure). Electrical data of the contacts: 2 A 250 Vac.**

Function	Detail (Connector name)	V OUT	Internal fuse
BKF AUX	$COM1_{(XB1)}$ - $NO1_{(XB3)}$	250 V RMS	2 A time delay

⚠	**The backfeed protection for the input mains supply (MAINS SUPPLY) is incorporated inside the UPS modules as standard.**

As an option the unit can be delivered with the integrated internal backfeed switches.

3.2 Cable positioning

⚠	WARNING! The cables must be installed on trays according to the following diagrams. The trays must be positioned near the UPS.
⚠	WARNING! All metal and suspended ducts or those in raised flooring MUST be connected to earth and to the various cabinets
⚠	WARNING! Power cables and control cables MUST NEVER be installed in the same duct.
⚠	WARNING! Risk of electromagnetic interference between battery cables and output cables.

Correct installation

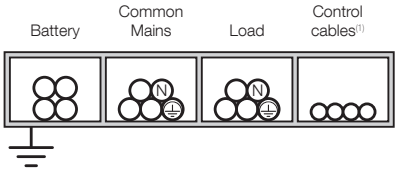

Acceptable installation

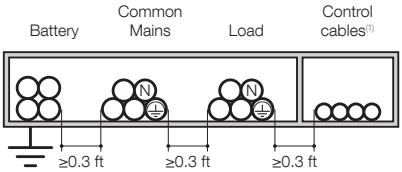

1. *Control cables: connections between the cabinets and each unit, alarm signals, remote mimic panel, connection to the BMS (Building Management System), emergency stop, connection to generator.*

4. Overview

MODULYS GP front view

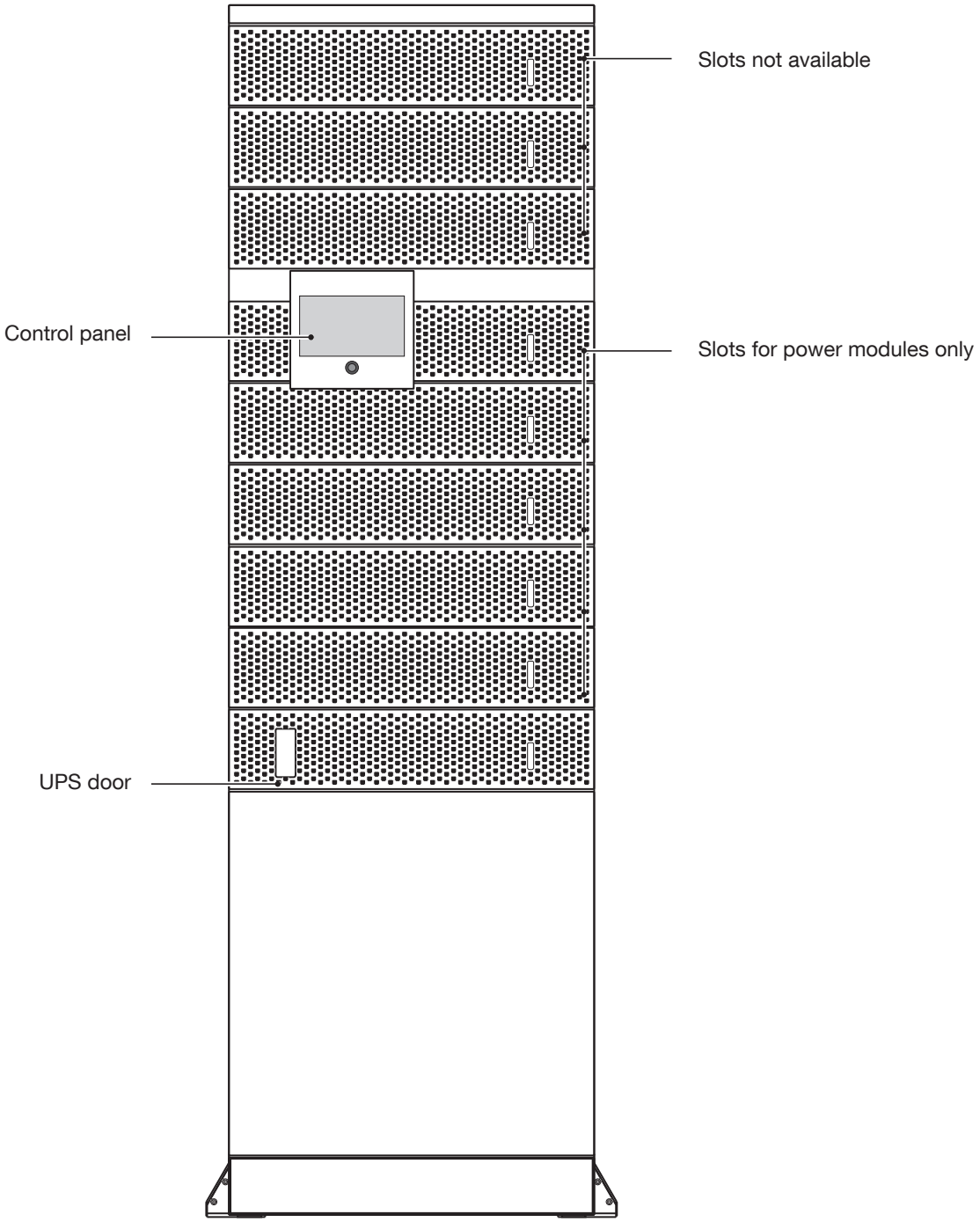

System with input, aux mains, output switches

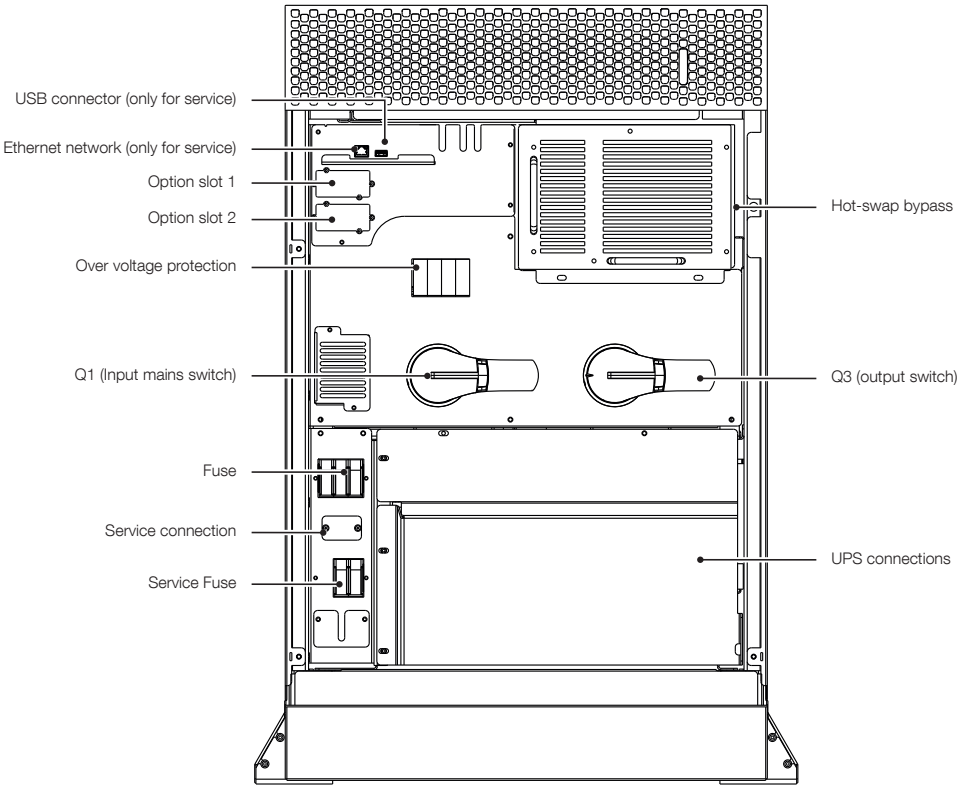

Wiring diagram

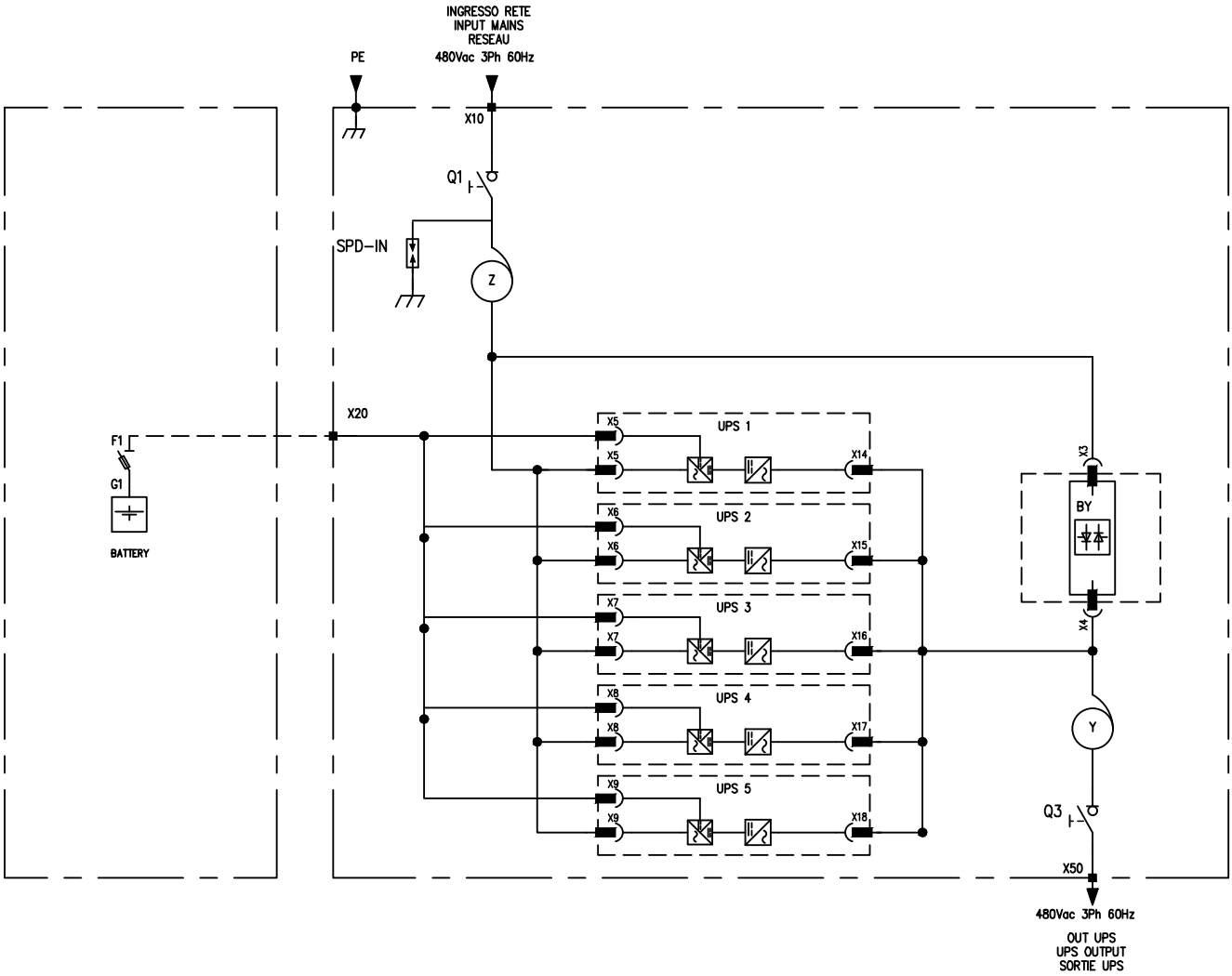

5. Connections

⚠	NOTE! Before carrying out any operations on the unit read the 'Safety standards' chapter carefully.
⚠	WARNING! Battery power terminals can be supplied by: - external battery cabinet; - internal battery modules; - UPS power modules. Before working on this circuit ensure that: - all the external battery cabinet switches are in OFF position; - all the internal battery modules are disconnected; - the UPS is in maintenance bypass mode (refer to 'Operating modes' chapter); - all UPS power modules are disconnected; Check the presence of voltage before operating.
⚠	WARNING! The unit is supplied with the bars already installed. In the case of separate mains connection remove the bars.

Rear cable entry

⚠	DANGER! HAZARD OF ELECTRIC SHOCK, EXPLOSION, OR ARC FLASH Do not drill or punch holes for cables or conduits with the gland plate installed and do not drill or punch holes in close proximity to the UPS. Failure to follow these instructions will result in death or serious injury.

1. Remove the lower back aluminium gland plate.

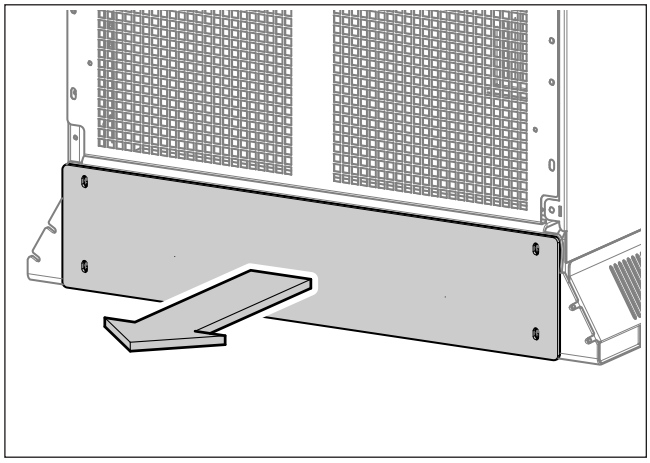

2. Drill/punch holes for power cables/conduits in the aluminium gland plate.

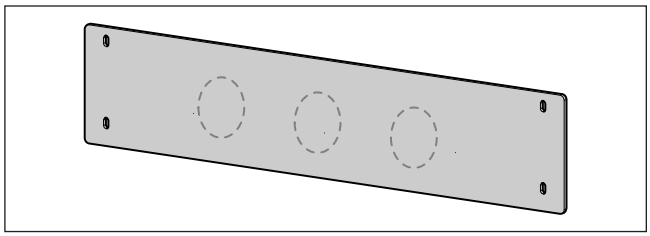

3. Install conduits (not provided), if applicable.

4. Install the aluminium gland plate in the rear of the UPS.

The output a.c. circuit is considered as a separately derived source. If local codes require grounding of this circuit, use terminal 'N' for bonding this circuit to the enclosure PROTECTIVE EARTH TERMINAL. Ground the enclosure to a suitable grounding electrode in accordance with local code requirements.

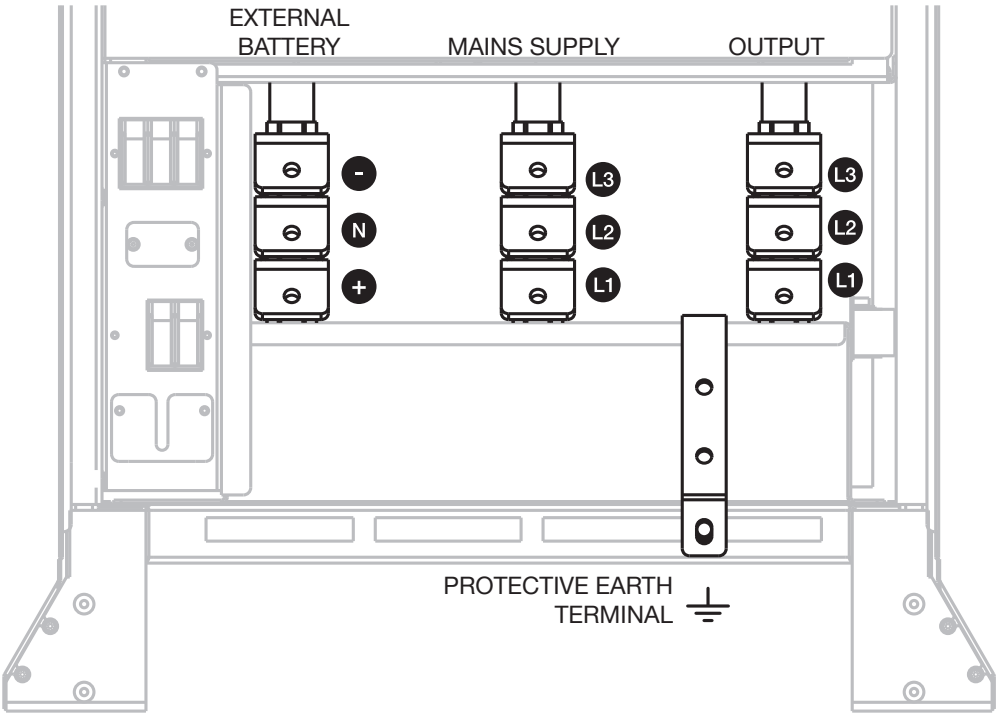

5.1 External battery connection

⚠	NOTE! For further information refer to the battery cabinet manual.

- Remove the plastic terminal block protection.
- Connect the protective earth (PE) cable.
- Connect the cables between the UPS terminals and the battery cabinet terminals.

⚠	WARNING! Strictly observe: - the polarity of each individual string (refer to the figure below); - the cable cross section (refer to 'Electrical requirements' chapter).
⚠	WARNING! Cabling errors with inversion of battery polarity may cause permanent damage to the equipment.
⚠	Reassemble the plastic terminal block protection.

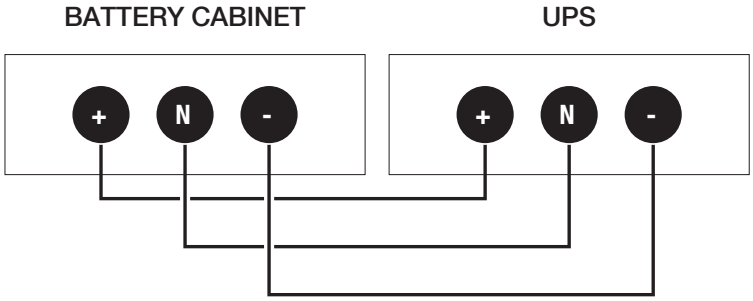

⚠	Note! Not all battery/capacity combinations are available.
⚠	Note for Li-ion batteries (LIB): The UPS interface to the Li-ion batteries (LIB), which could be based on a communication protocol or on dry contacts, monitors battery operation for the sole purpose of ensuring overall system service. This UPS battery interface cannot in any way replace safety systems to protect the battery against abuse or improper use, which requires an independent system in compliance with the relevant standards.

5.2 Power and bypass module insertion

⚠	Note! Before carrying out any operations on the unit read the 'Safety standards' chapter carefully.
⚠	WARNING! RISK OF TIPPING OVER! Before carrying out any operations, ensure the UPS is secured at the feet.
⚠	WARNING! RISK OF TIPPING OVER! The six feet must be secured evenly to ensure the unit is stable.

⚠	WARNING! RISK OF TIPPING OVER! The modules must be inserted from the bottom upwards and removed from the top downwards to ensure the unit remains stable.
⚠	WARNING! Before removing any module, ensure that the remaining power modules can support the load.

Power module electrical diagram

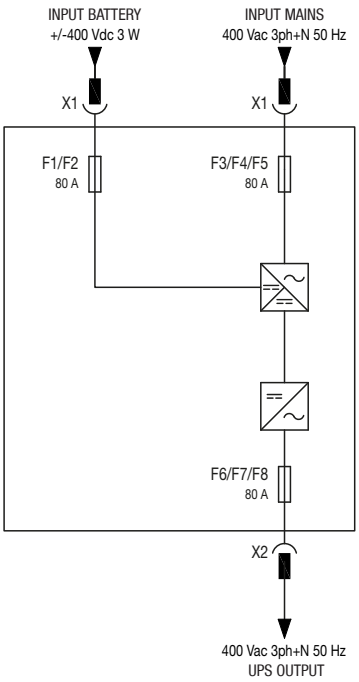

Bypass module electrical diagram

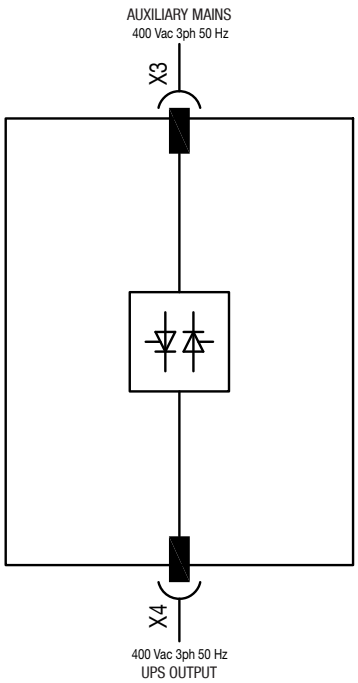

Power module insertion

1

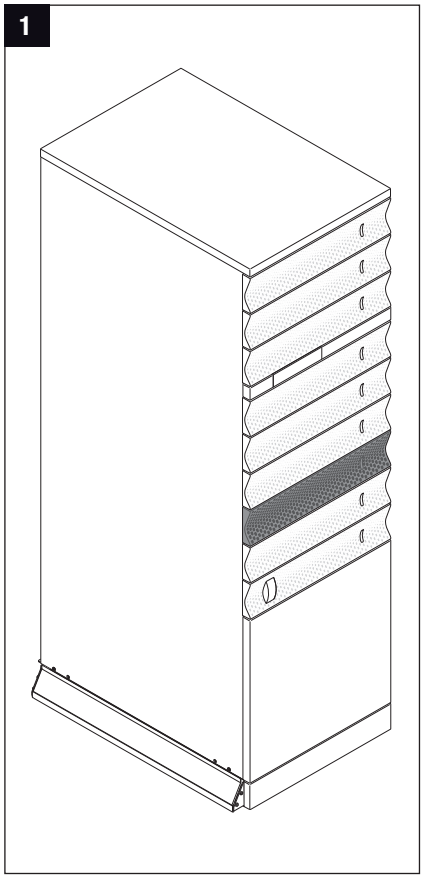

2

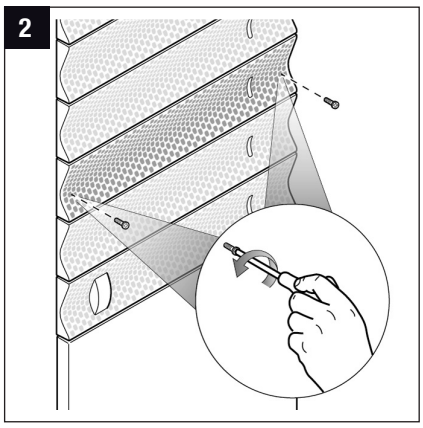

3

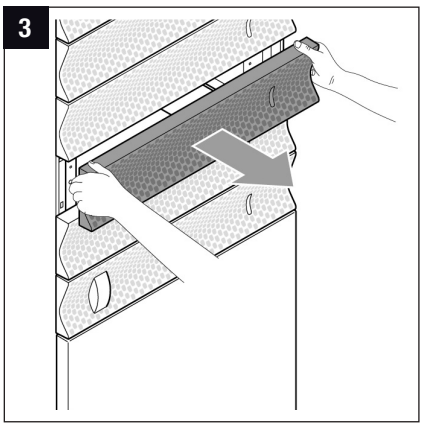

4

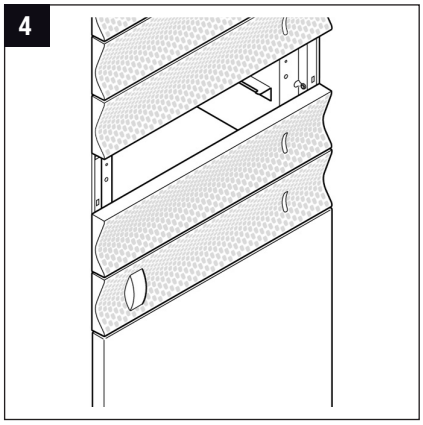

5

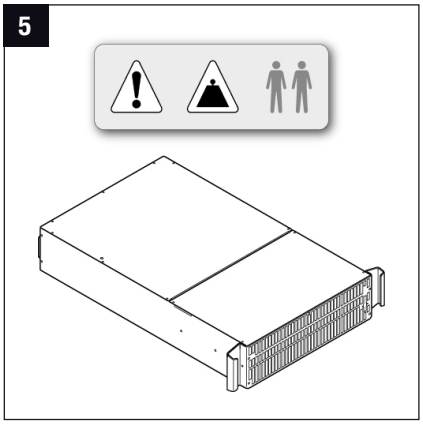

WARNING!
Ensure the module is installed in the correct position.

6

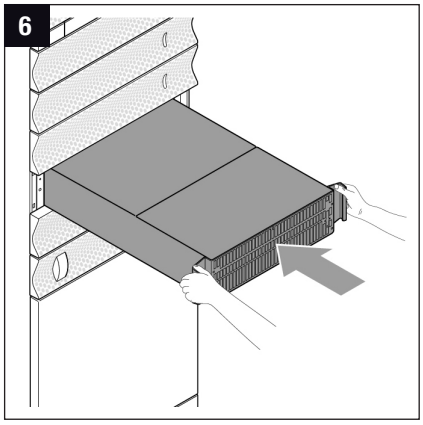

7

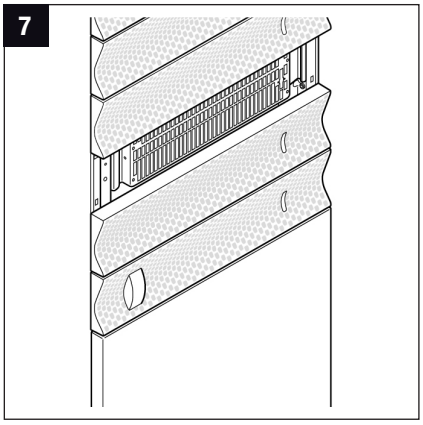

8

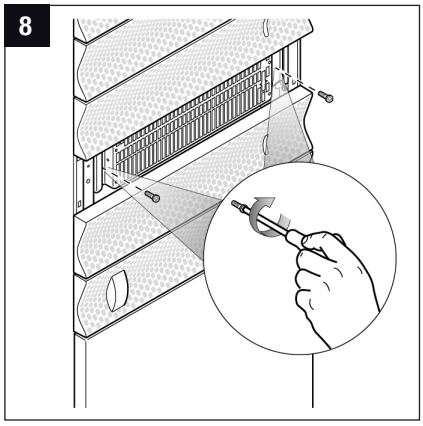

9

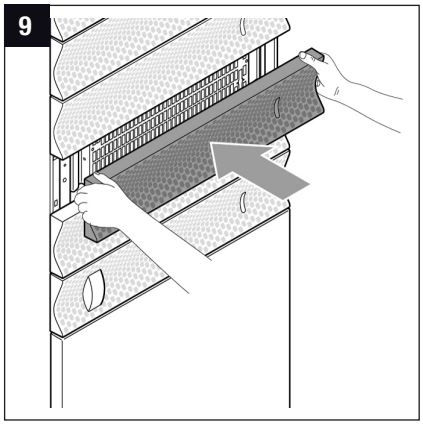

10

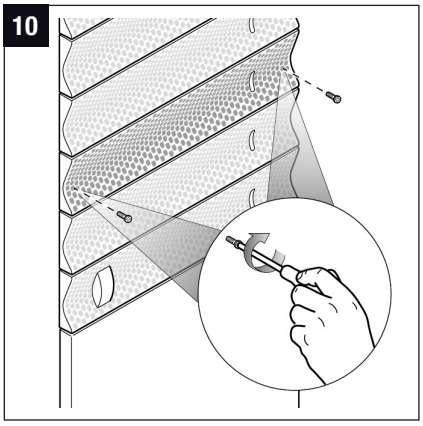

Power module removal

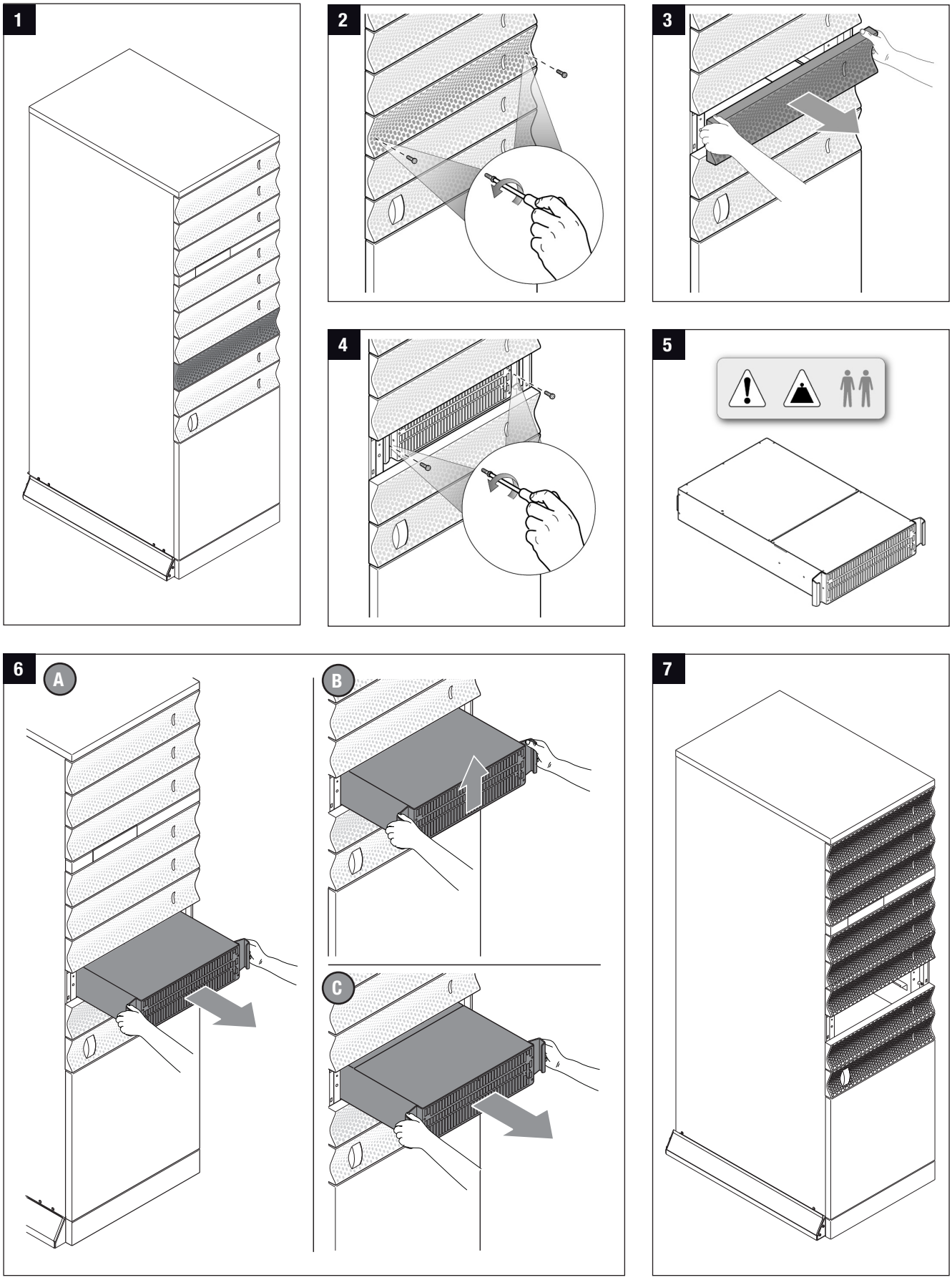

BYPASS MODULE REPLACEMENT

⚠	WARNING! It is only possible to remove the bypass module when the unit is in normal mode or in maintenance bypass mode (refer to 'Operating modes' chapter). Before removing the bypass ensure that the unit is not in bypass mode.

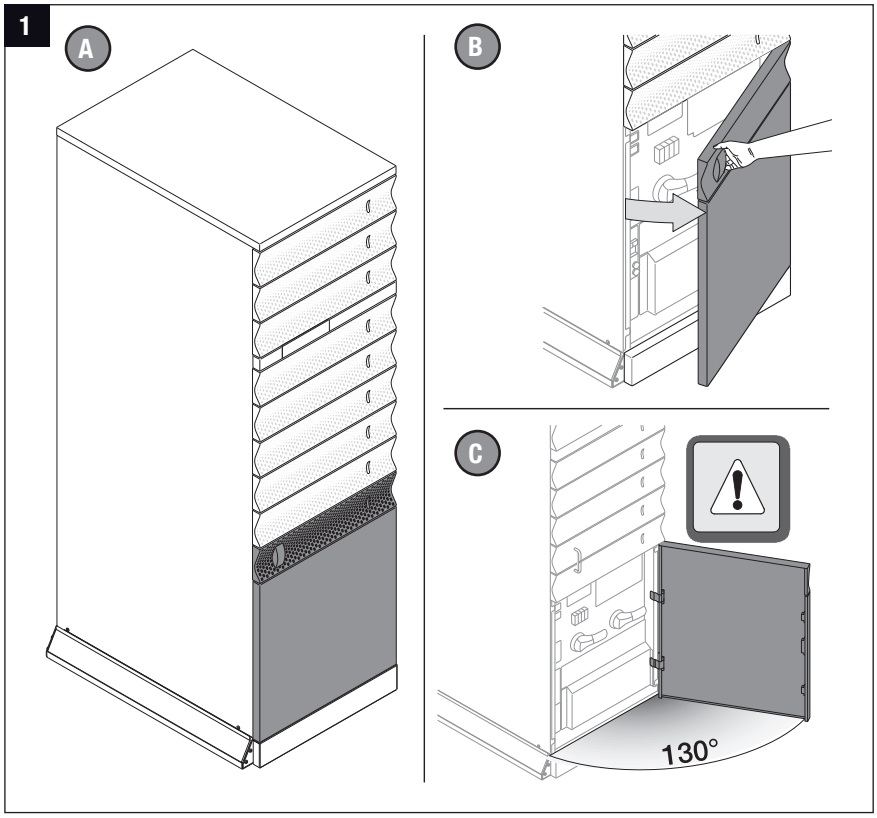

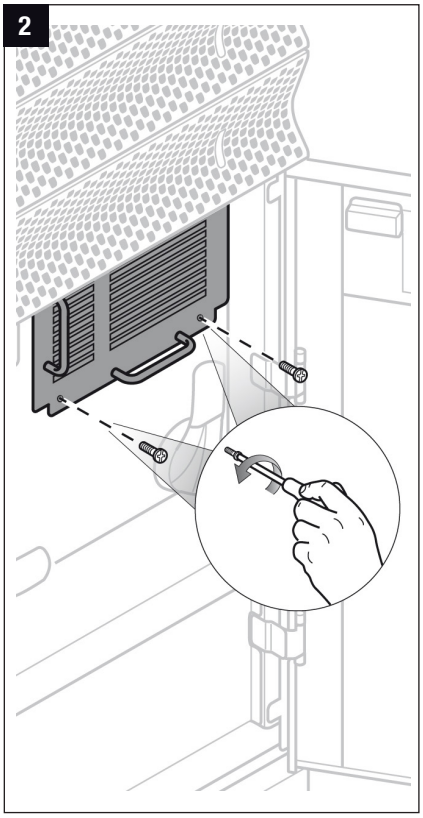

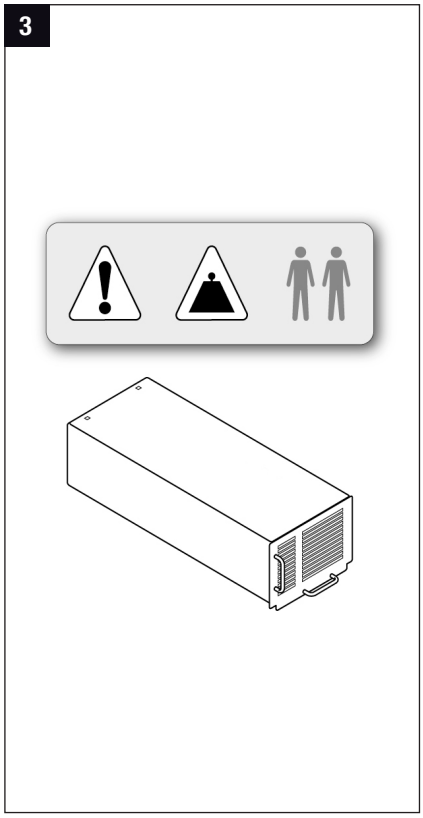

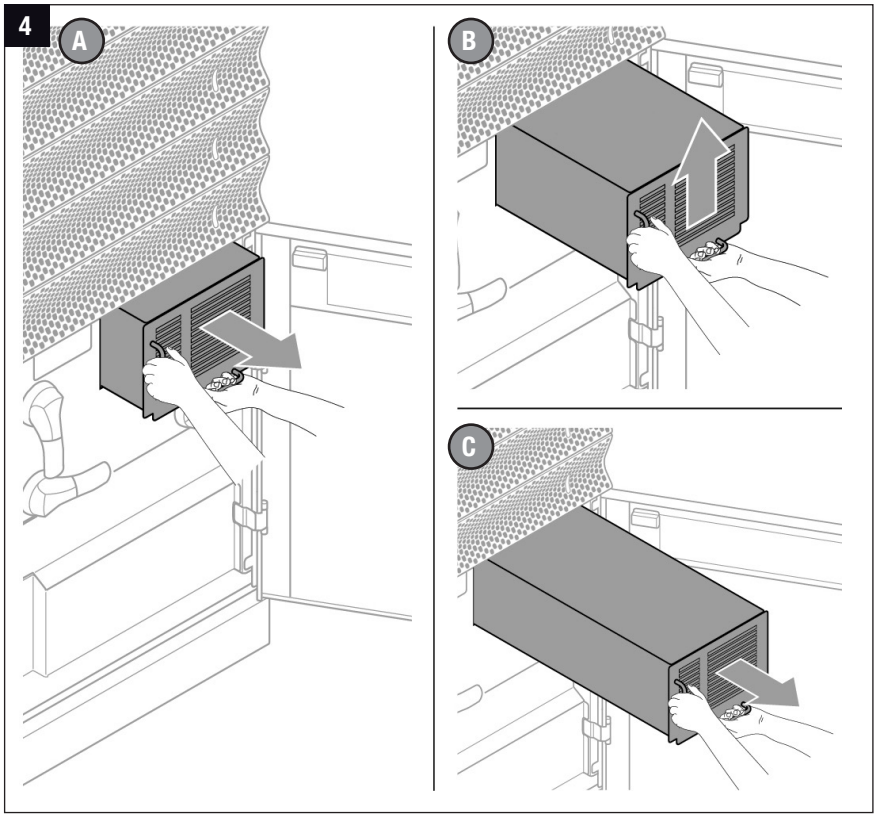

5

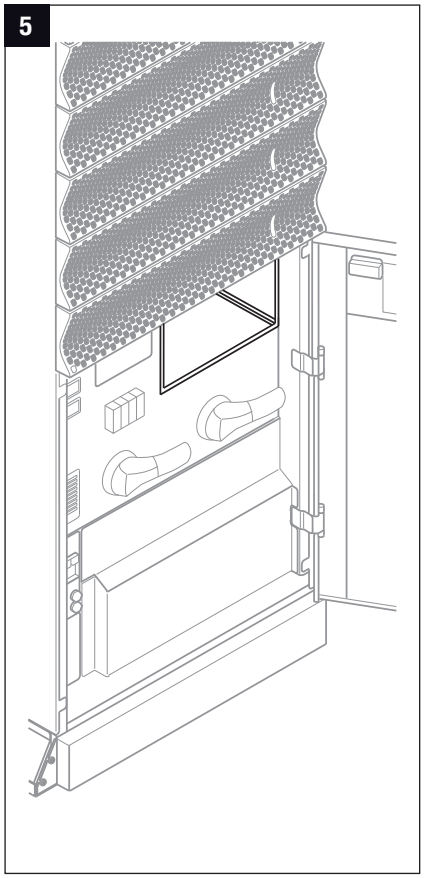

6

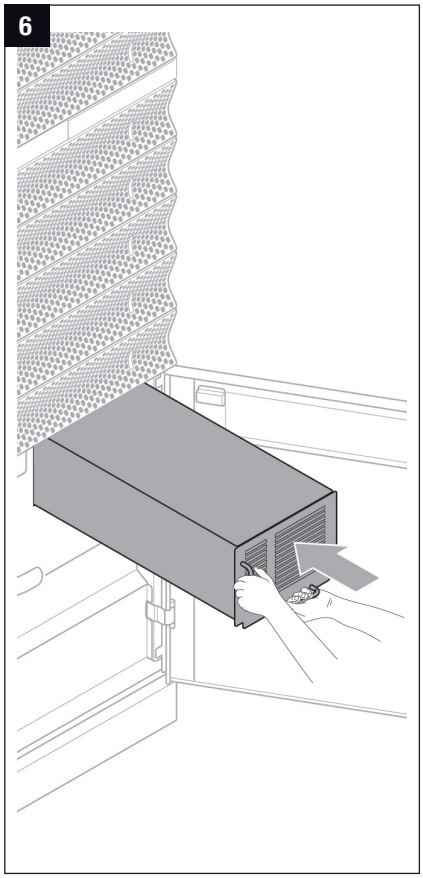

7

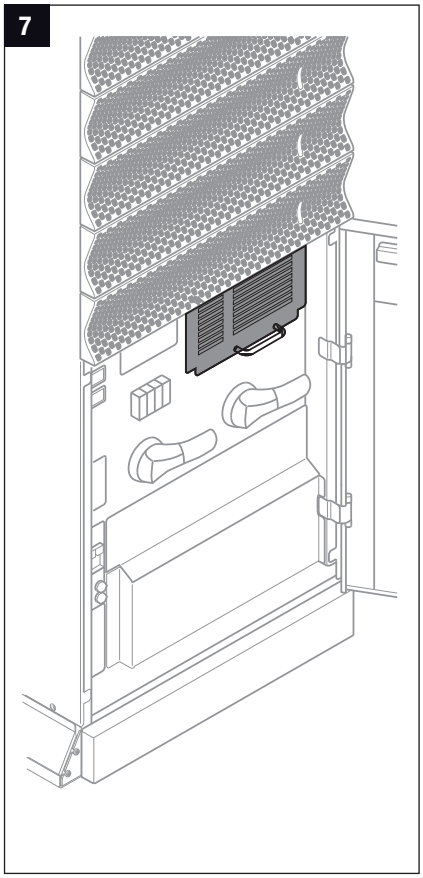

8

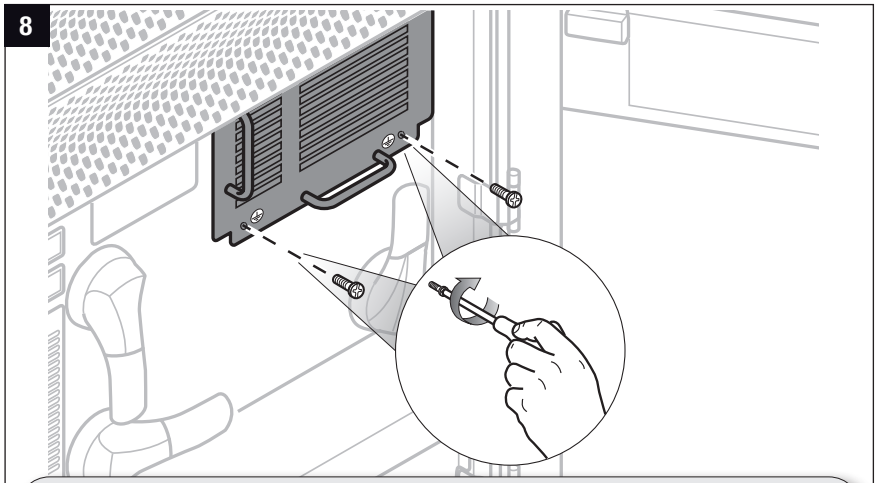

WARNING!
The screws provide protective bonding and avoid unauthorised bypass removal.
Tighten the screws to ensure the bonding protection.

DANGER!
Failure to observe this safety instruction could result in fatal accident or serious injury, and damage equipment or the environment.

9

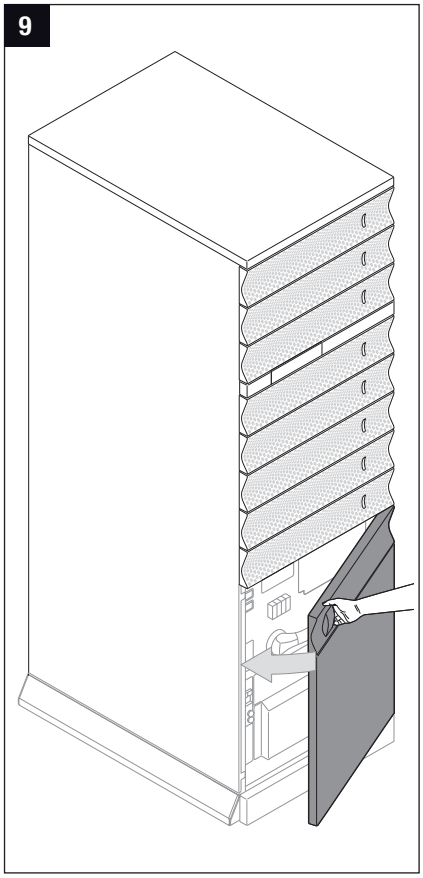

6. Control panel

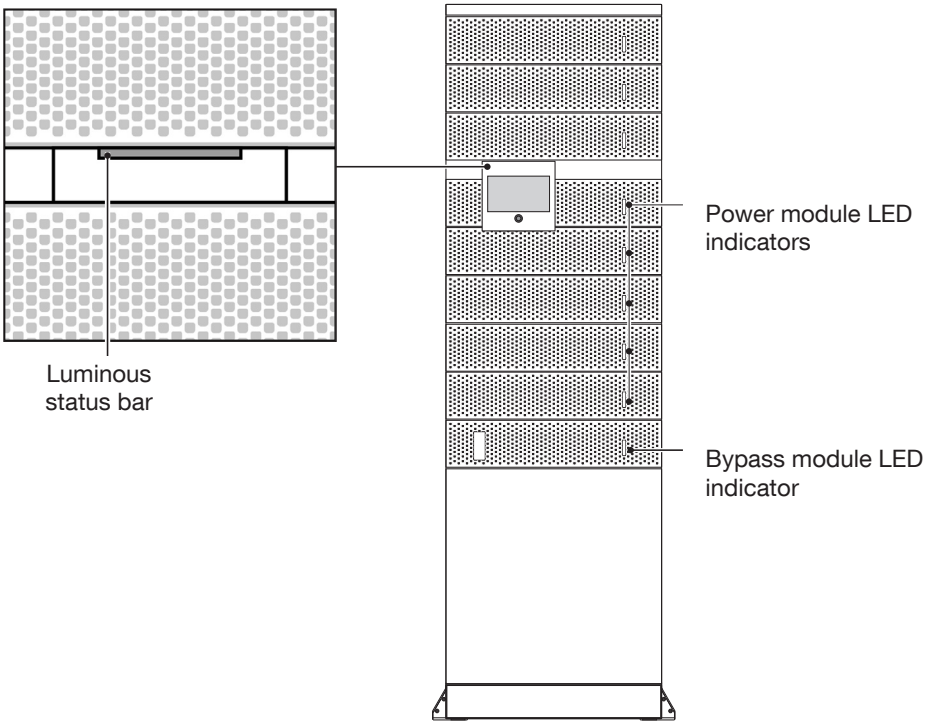

LED indicator		
Colour	Power module	Bypass module
Green	Module on inverter	Bypass ready to start
Flashing green	-	Load on bypass
Yellow	Module ready to start	Maintenance bypass
Flashing yellow	Module initialising	Load on inverter or bypass and transfer impossible/ locked
Red	Module stopped due to alert	Bypass alert present
Flashing red	Initialising failure	Bypass blocked with alert
Flashing green yellow and red	No communication	No communication

Control panel luminous status bar indicator	
Colour	Status
Flashing red-yellow-green-red	No communication. The data is no longer updated or not present. Load status cannot be given.
Flashing red	Load supplied, but the output will stop in few minutes.
Red	Load not supplied: Output switched OFF due to an alarm.
Flashing yellow-red	Load supplied, but no longer protected. A critical alarm occurs.
Flashing yellow	Maintenance request / in progress.
Yellow	Load supplied with warning.
Flashing green-yellow-green	Load supplied and preventive alarm present.
Flashing green	Load going to be supplied and testing.
Green	Load protected in inverter.
Grey (OFF)	Load not supplied output on standby / isolated / OFF.

Control panel extraction

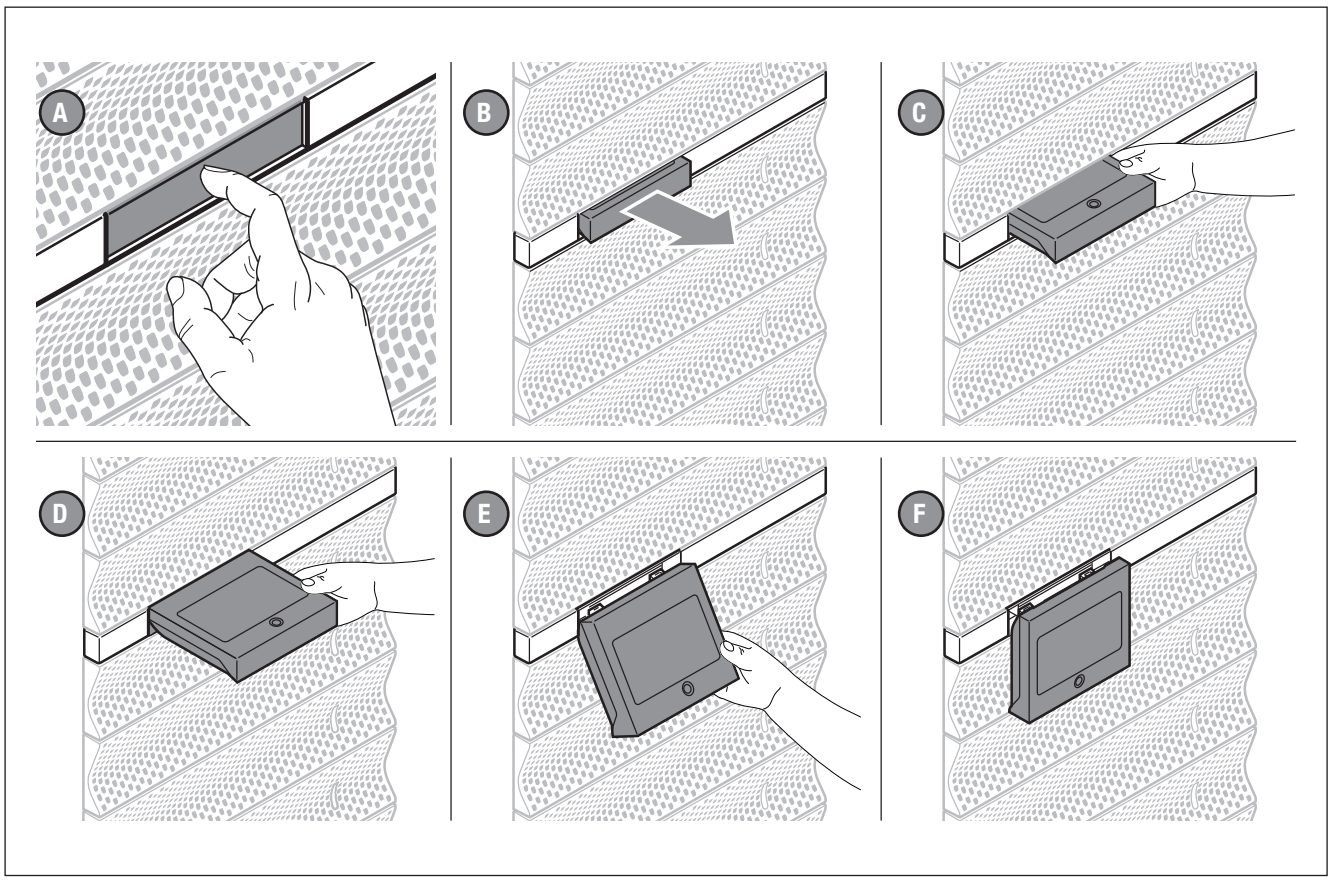

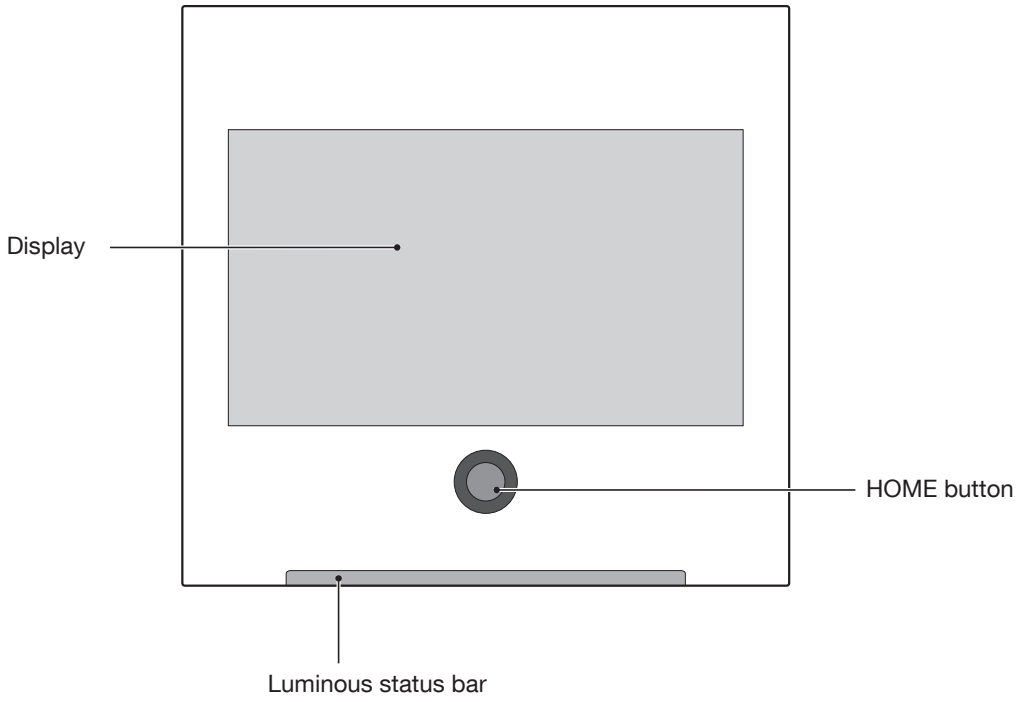

Only two elements are necessary to interact with the unit:

- HOME button: is a mono-stable button used to interact manually with the display especially in emergency situations. Logic behind the interaction is:
  - Single pressing (below 3 sec): HOME page return of graphic display
  - 3 sec < time < 6 sec: change the language to the default (English)
  - 6 sec < time < 8/9 sec: go to the calibration screen automatically
  - Above 8/9 sec: implement the hw reset of the micro controller and restart of the graphic
- Display: is the main active matrix of the display sensitive to touch pressure. The display is designed for rugged industrial applications. The display is single-touch only (no double touch effects). Depending on pressure, the navigation tree and various functions will be executed.

Two special functions are present on the control panel:

- Standby screen: for safety reasons, after a programmable amount of time, the display goes on standby. Display goes to the main screen and touch screen sensitivity is disabled. A label on the bottom of the main screen displays this status. To exit this status press the screen for the HOME button.
- OFF status: for power consumption and life enhancement, after a programmable amount of time display goes in “off”. Display goes black and no interaction is possible. Touching the HOME button or screen resumes normal operations.

⚠	**Handle the control panel with care. It is made of metal, glass and plastic and contains delicate electronic components. The control panel may be damaged if dropped, pierced or broken or comes into contact with liquids.** **Do not use the control panel with a cracked screen, as it may cause injury.**

7. Display operation

7.1 Display description

- Stand alone UPS or unit view

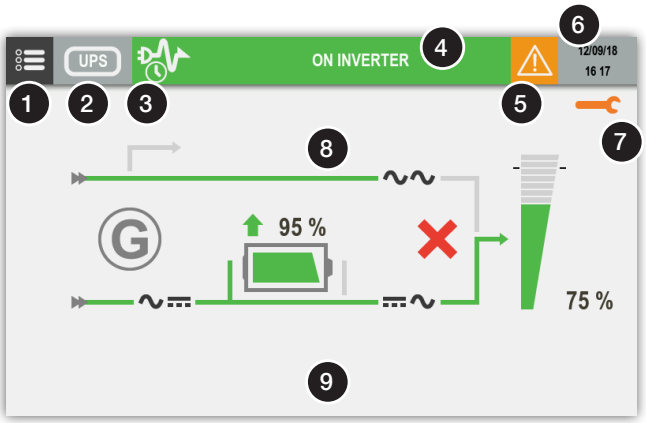

- Modules view:

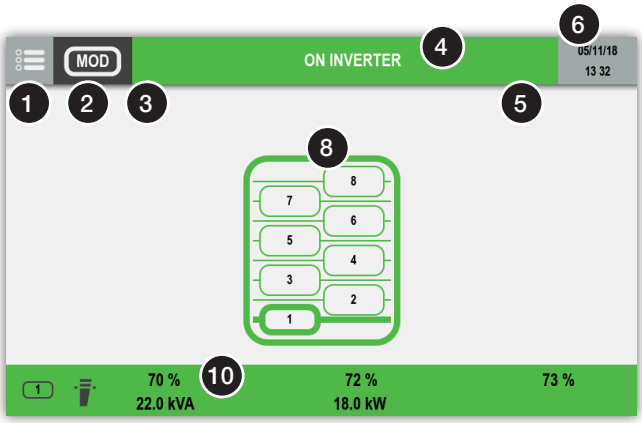

- UPS parallel system: System view

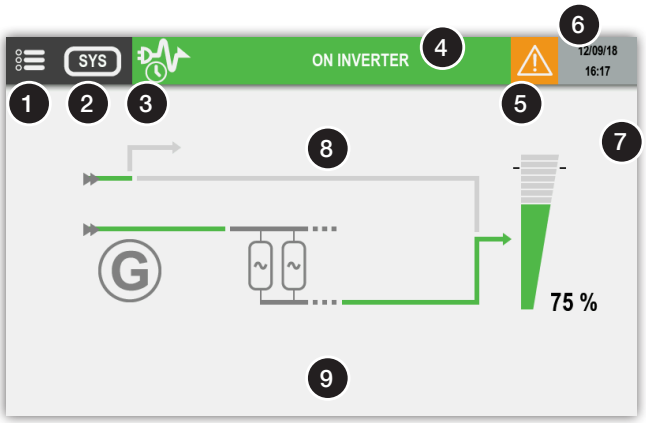

- UPS parallel system: Units overview

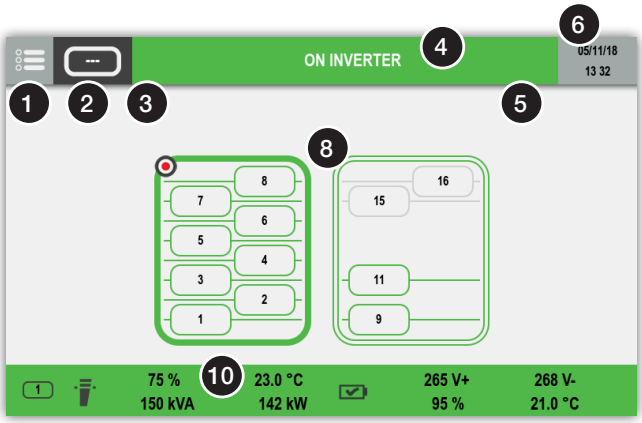

1. Menu access
2. Device reference
3. Functioning mode (see 'Functioning mode' chapter)
4. Status displaying / Status page access
5. Alarm present – access to alarm page
   "Alarms" icon appears in case of preventive/critical alarm. A dedicated pop-up appears and can be cleared.
6. Clock
7. Maintenance alert
8. Synoptic area
9. Help message area
   "Press Key to wake up" appears when the display goes on standby. Touch the display to wake it up.
10. Measures report

7.2 Menu architecture

	MENU ITEMS		
	Modular Unit [UPS]	Modular Unit [1] to [3]	Modular System [SYS]
MONITORING			
▶ ALARMS	•	•	•
▶ STATUS	•	•	•
▶ SYNOPTIC	•		
▶ UNIT		•	•
▶ SYSTEM		•	•
▶ MODULES OVERVIEW		•	•
▶ MODULE	•	•	•
EVENTS LOG	•	•	•
MEASUREMENTS			
▶ OUTPUT MEASUREMENTS	•	•	•
▶ BATTERY MEASUREMENTS	^	^	^
▶ INPUT MEASUREMENTS	•	•	•
▶ INVERTER MEASUREMENTS	•	•	
▶ BYPASS MEASUREMENTS	^	^	^
CONTROLS			
▶ UPS PROCEDURE			
▶ START	•[1]		•[1]
▶ STOP	•[1]	•[1]	
▶ ON MAINTENANCE BYPASS	•[1]		•[1]
▶ MODE			
▶ ECO MODE CONTROLS			
▶ Eco Mode ON	^		^
▶ Eco Mode OFF	^		^
▶ ECO MODE SCHEDULE	^		^
▶ ENERGY SAVER CONTROLS			
▶ Energy Saver ON			^
▶ Energy Saver OFF			^
▶ BATTERY			
▶ BATTERY CONTROLS			
▶ BATTERY TEST	^	^	^
▶ BATTERY SCHEDULE	^	^	^
▶ MAINTENANCE			
▶ Alarms reset	•	•	•
▶ LED test	•	•	•

	MENU ITEMS		
	Modular Unit [UPS]	Modular Unit [1] to [3]	Modular System [SYS]
CONFIGURATIONS			
▶ CLOCK	•		•
▶ COM-SLOTS			
▶ COM-Slot 1		^	
▶ COM-Slot 2		^	
▶ TEMPERATURE PROBE	^	^	^
▶ REFERENCE			
▶ SOCOMEC REFERENCE		•	•
▶ SERIAL NUMBER		•	•
▶ User Reference		•	
▶ Location		•	
▶ REMOTE			
▶ Remote ON			•
▶ Remote OFF			•
USER PARAMETERS			
▶ LANGUAGE	•		•
▶ PASSWORD	•		•
▶ BUZZER	•		•
▶ DISPLAY	•		•
▶ PREFERENCES	•		•
▶ TOUCHSCREEN	•	•	•

	MENU ITEMS		
	Modular Unit [UPS]	Modular Unit [1] to [3]	Modular System [SYS]
SERVICE			
▶ SERVICE REPORT	•	•	
▶ FW VERSION	•	•	
▶ UPS SETTINGS			
▶ OUTPUT MENU			
▶ Output voltage	•		•
▶ Output frequency	•		•
▶ Converter mode	•		•
▶ Automatic restart	•		•
▶ BATTERY MENU			
▶ BATTERY INSTALLATION			
▶ Battery available	^	^	^
▶ Battery type	^	^	^
▶ Battery connection	^	^	^
▶ Recharge type	^	^	^
▶ BATTERY DATA			
▶ Capacity	^	^	^
▶ N° of cells	^	^	^
▶ N° of blocks	^	^	^
▶ Premin. Voltage	^	^	^
▶ Min. Voltage	^	^	^
▶ Floating	^	^	^
▶ Boost Voltage	^	^	^
▶ BATTERY THRESHOLDS			
▶ Rech. Curr. Limit	^	^	^
▶ Float-Boost Threshold	^	^	^
▶ Boost-Float Threshold	^	^	^
▶ TEMP.COMPENSATION			
▶ Temper.Compensation	^	^	^

	MENU ITEMS		
	Modular Unit [UPS]	Modular Unit [1] to [3]	Modular System [SYS]
▶ TRANSFORMER MENU			
▶ Input transformer	•		•
▶ Output transformer	•		•
▶ Aux transformer	•		•
▶ Input trasfo Voltage	•		•
▶ Output trasfo Voltage	•		•
▶ Aux trasfo Voltage	•		•
▶ MAINS CONFIGURATION			
▶ Mains configuration	•		•
▶ REDUNDANCY			
▶ Nominal Number of Modules			•
▶ Redundancy level			•
▶ **NETWORK PARAMETERS (Only for service)**			
▶ DHCP	•	•	
▶ IP	•	•	
▶ MASK	•	•	
▶ GATEWAY	•	•	
▶ MAC (ready only)	•	•	
▶ **COMMISSIONING**	•	•	

(^). Depending on setting

1. Displayed depending on state.

7.3 Functioning mode

Service

Isolated

Eco mode scheduling active

Eco Mode active

Standby active

Energy saver active

Autotest

7.4 STATUS

7.4.1 STATUS PAGE

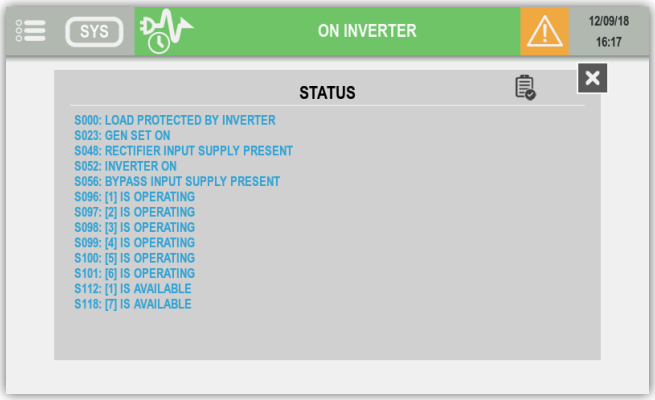

Filtering

List all active status

List all status

List all status not active

7.5 Alarms management

7.5.1 Alarm report

The alarm icon is present if at least one alarm is present.

Tap on the icon to open the alarm list.

7.5.2 Alarm popup

In case of critical alarm a popup message appears and the buzzer is running according its settings.

The highest priority alarm is displayed.

Tap on valid button to stop the buzzer and to close the popup message. The alarm page is automatically display after this action.

7.5.3 ALARM PAGE

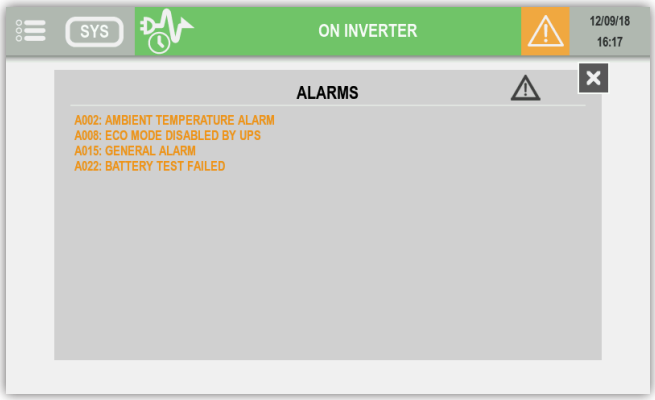

Filtering

List all active alarms

List all active preventive alarms

List all active critical alarms

Popup alarm for preventive alarm

In USER PARAMETERS menu, PREFERENCES item gives the possibility to enable popup alarm also with preventive alarms.

7.6 SYNOPTIC ANIMATION

- Stand alone UPS or unit view

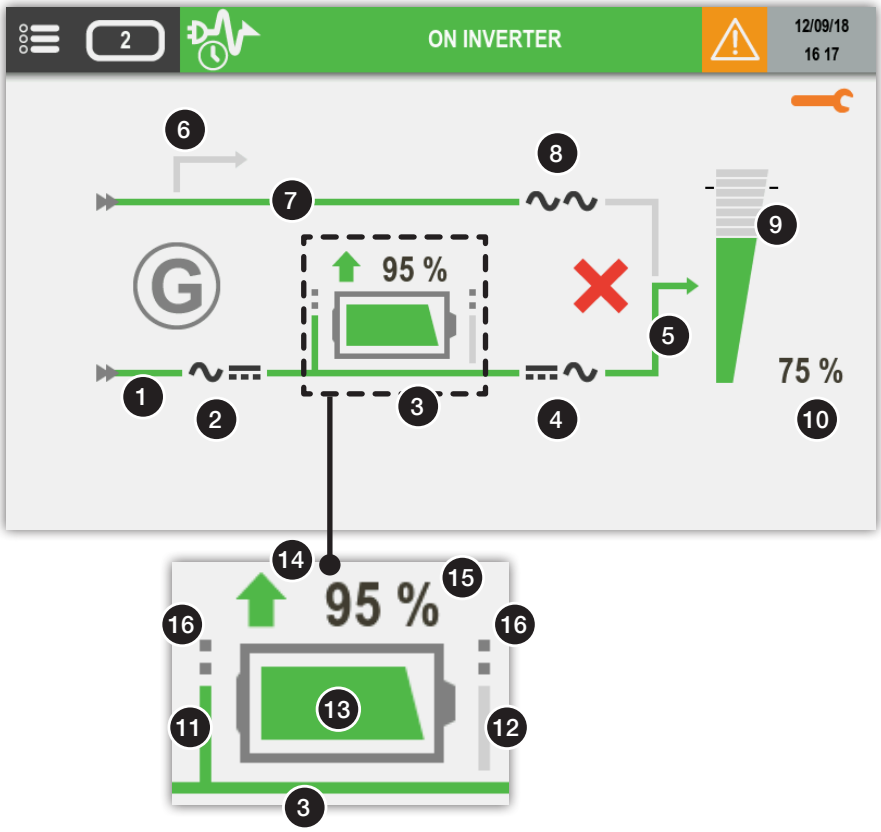

Item	Description	Rules of animation				Touch actions
		Grey	Green	Yellow	Red	
1	Rectifier input supply	Not present	Present	Out of tolerance	-	-
2	Rectifier status	Normal status	-	Preventive alarm	Critical alarm	Access to input measurements page
3	DC voltage bus	DC voltage absent	DC voltage presence	-	-	-
4	Inverter status	Normal status	-	Preventive alarm	Critical alarm	Access to inverter measurements page
5	Inverter output	Inverter OFF	Inverter ON	Inverter on battery	-	-
6	Maintenance bypass *	MBP present	-	Load on maintenance bypass	-	-
7	Bypass input *	Not present	Present	Out of tolerance	-	-
8	Bypass status *	Normal status	-	Preventive alarm	Critical alarm	Access to bypass page
9	Load rate symbol	No load	Fill-up to 95%	Fill-up to 110%	Fill-up over 110%	Access to output measurements pages
10	Load rate value	Instantaneous value. displayed if value > 0				-
11	DC battery input **	DC voltage absent	DC voltage presence	BCR function running	-	-
12	DC battery output **	DC voltage absent	DC voltage presence	Inverter on battery		-
13	Battery indicator **	-	Fill-up to 100%	Fill-up to 45%	Fill-up to 15%	Access to bat. measurements page
14	Battery charging / discharging **	-	Battery charging	Battery discharging	-	-
15	Battery level or remaining backup time during battery discharge **	Instantaneous value. displayed if value > 0 The backup time is no more displayed if it is below two minutes.				-
16	Shared battery symbol not present if each unit has its own battery. **					-

** Element disappears if converter mode is active*
*** Not present if batteries are not present*

- **Battery animation**

Battery status	DESCRIPTION
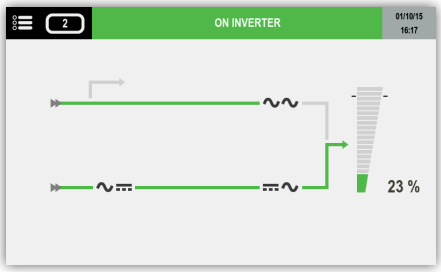	If battery is absent, the battery icon is not displayed
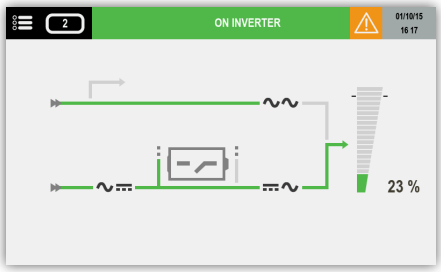	If battery is present but not connected, the icon is displayed
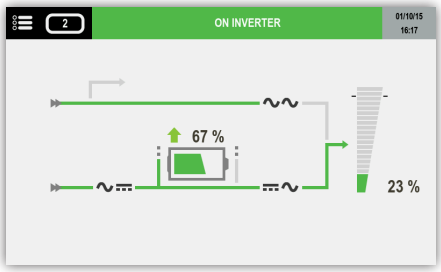	If the battery is present and charging, the arrow icon is displayed
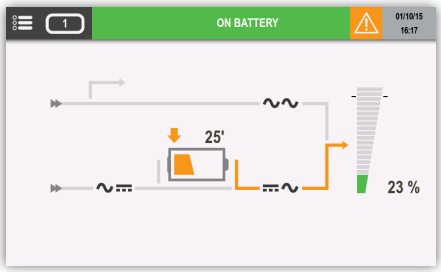	If the battery is present and discharging, the arrow icon is displayed
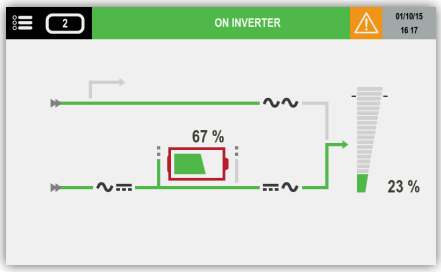	If a battery alarm has occurred, the red icon is displayed

7.6.1 Additional icons

Bypass impossible

Bypass locked

“Genset Mode” when the gen set contact is active. Need ADC+SL correctly configured.

Maintenance alarm.
Preventive maintenance is requested.

7.7 Event log page

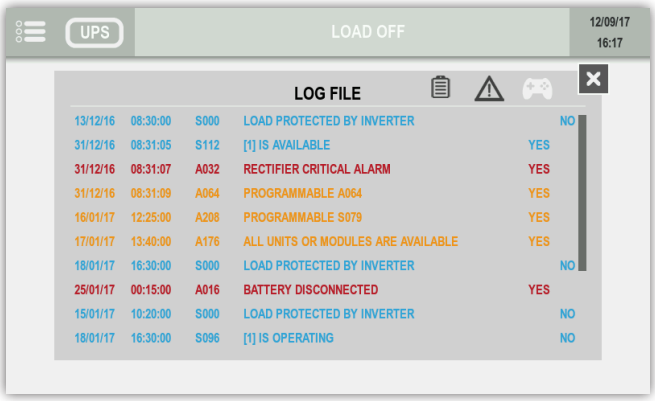

Show STATUS events

Show ALARMS events

Show CONTROLS

7.8 Menu function descriptions

7.8.1 Entering passwords

Some operations and settings require a password in order to be performed.

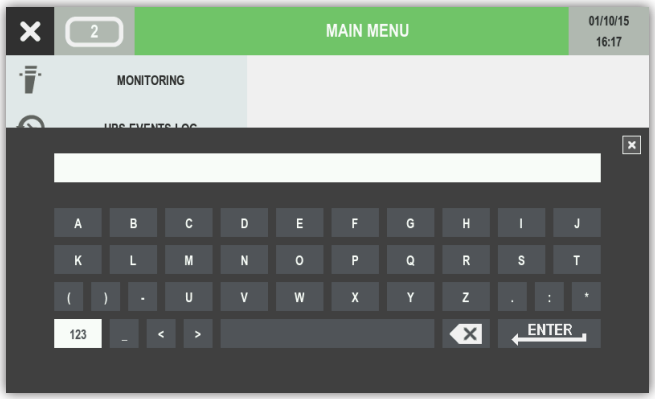

Press “123” to cycle to number view page.

Press ENTER to confirm.

Wildcard covering of the password is active by default.

The default password is **SOCO**.

⚠	NOTE! **The password must only contain capital letters and not include the following characters ():*<>._**

Press **ENTER** to confirm the selection or **HOME BUTTON** to abort.

7.8.2 MONITORING menu

Submenu Alarm opens the alarm pages.

Submenu Status opens the status pages.

7.8.3 EVENTS LOG menu

This menu accesses the event log (Status and Alarms).

7.8.4 MEASUREMENTS menu

This menu displays all UPS measurements relating to the rectifier input stage, output stage, batteries, bypass input stage and inverter.

The pins on the bottom of the screen indicate whether or not there are more pages. Sliding to the right or left changes measurements page.

7.8.5 CONTROLS menu

This menu contains the commands that can be sent to the UPS. Some of them are password protected. If a command is not available, a COMMAND FAILURE message appears.

- **UPS PROCEDURE: START/ON MAINTENANCE BYPASS/STOP** see 'Operating procedures' chapter.
- **BATTERY: BATTERY CONTROL > BATTERY TEST:** this function checks whether or not test conditions are available and returns the results.
- **ECO MODE CONTROLS:** this function sets/resets the **ECO MODE**.
- **MAINTENANCE: Alarms reset:** this function clears the alarm history, **LED test:** this function activates LED flashing for a few seconds.

7.8.6 UPS CONFIGURATION MENU

- **CLOCK**: this function sets the date and time.
- **COM-SLOTS**: this function configures the RS485 modbus serial link.
- **REFERENCE:** this function gives the possibility to customised the unit reference and the location.
- **REMOTE**: this function enables controls from remote devices through MODBUS protocol (NET VISION for example).

7.8.7 USER PARAMETERS menu

This menu contains the different functions for users such as language, password, buzzer, display, preferences, touchscreen calibration.

7.8.8 SERVICE menu

This menu is reserved for support service personnel and holds UPS identification data and utilities for software upgrades.

- **UPS SETTINGS:** critical machine settings for output. Some parameters cannot be modified when the UPS supplies the load by INVERTER or BYPASS.

⚠	**Wrong configuration in UPS SETTINGS could damage the load or the batteries.**

7.9 ADDITIONAL USER FUNCTIONS

7.9.1 Phase color modification

- Enter **MAIN MENU > USER PARAMETERS > PREFERENCES**

For each phase is possible to select a specific colour in a set of colour range. Those colours are applying in the measurements pages.

Colour	Default colour
Yellow	Phase 3
Orange	
Red	
Green	
Light blue	Phase 2
Dark blue	
Purple	Phase 1
Brown	
Light grey	
Dark grey	
Black	

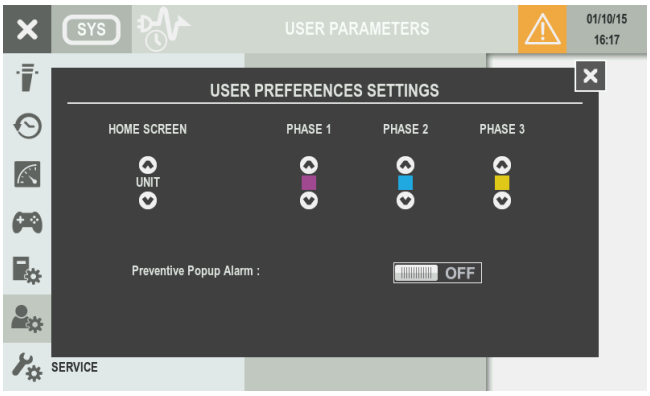

The popup alarm appears in case of critical alarms. This function can be extended to preventive alarms by switching “Preventive Popup Alarm” to ON.

8. Operating procedures

⚠	NOTE: before carrying out any operations on the unit read the 'Safety standards' chapter carefully.
⚠	NOTE: with the stop procedure the load will be disconnected.

8.1 Switching on

- Connect the mains to the UPS.
- Put switch **Q1** (or the external input mains switching device) into position **1**.
- Wait for the display to switch on.
- Enter **MAIN MENU > COMMANDS > UPS PROCEDURES**.
- Select **Automatic Start Procedure** and press **ENTER**.
- Carry out the operations indicated on the display.

8.2 Switching off

This operation interrupts the power supply to the load. The UPS and the battery charger will be shutdown.

- Enter menu **MAIN MENU > CONTROLS > UPS PROCEDURE**.
- Select **Automatic Stop Procedure** and press **ENTER**.
- Wait approx. 2 minutes for the UPS shutdown.

⚠	NOTE: the controlled shutdown of each server connected to the LAN can be managed by shutdown software (only with Net Vision option card).

- Carry out the operations indicated on the display. This operation cannot be aborted.

8.3 Bypass operations

⚠	Available only with external manual bypass.

Switching onto maintenance bypass

This operation creates a direct connection between the UPS input and output, excluding the equipment control part. This operation is performed in the event of:

- standard maintenance.
- serious failure has occurred.

⚠	WARNING! This operation interrupts temporarily the power supply to the load.
⚠	WARNING! LOAD POWERED BY INPUT MAINS! Your load is exposed to mains disturbances.

- Enter menu **MAIN MENU > CONTROLS > UPS PROCEDURE**.
- Select **Automatic Stop Procedure** and press **ENTER**.
- Carry out the operations indicated on the display.

⚠	NOTE! When an external manual bypass is present: - carry out the procedure described above; - put the switch to position 1.

Switching on from maintenance bypass

- Put the external manual bypass switch to position **0**.

⚠	WARNING! This operation interrupts the power supply to the load.

- Put switch **Q1** (or the external input mains switching device) into position **1**.
- Wait for the display to switch on.
- Enter menu **MAIN MENU > CONTROLS > UPS PROCEDURE**.
- Select **Automatic Start Procedure** and press **ENTER**.
- Carry out the operations indicated on the display.

8.4 Extended out of service

When the UPS is deactivated for some time, the batteries must be recharged regularly.

They have to be recharged every three months.

- Connect the mains to the UPS.
- Put switch **Q1** into position **1**.
- Wait for the display to switch on.
- Close the external battery breaker/fuses.
- Put or keep switch **Q3** in position **0**.
- The battery must be charged for at least ten hours.
- Once ten hours have elapsed, open the external battery breaker/fuses.
- Put switch **Q1** into position **0**.

8.5 Emergency shutdown

⚠	NOTE! This operations interrupts the supply to the output load from both inverters and automatic bypass.

Ups power off

System with input and output switches: put **Q3** to position **0** when it's necessary to interrupt the power supply quickly. Refer to figure **1**.

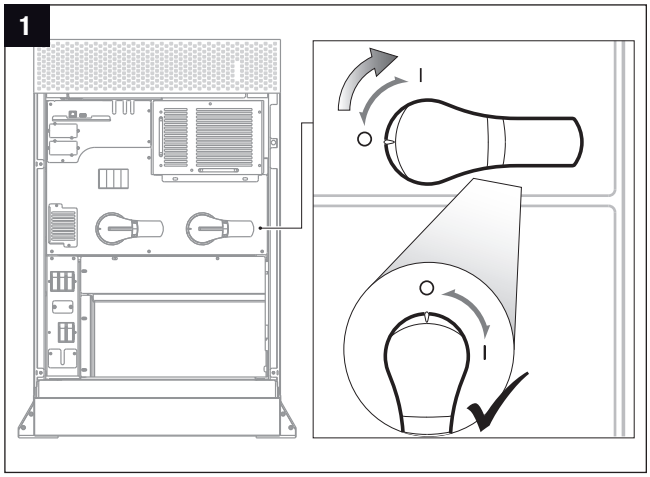

Remote ups power off

It is possible to interrupt the power supply to the output load using the ADC+SL board. Refer to 'Standard features and options' chapter.

9. Operating modes

9.1 On line mode

A special feature of the UPS is the ONLINE double conversion in conjunction with low distortion mains power absorption. In ON LINE mode, the UPS can supply a voltage that is fully stabilised in frequency and amplitude, regardless of any interference in the mains power supply, within the most stringent classification of UPS regulations.

ONLINE operation provides three operating modes according to mains and load conditions:

- **Inverter mode**

This is the most frequent operating condition: energy is drawn from the primary mains power supply and converted and used by the inverter to generate the output voltage to power the connected loads.

The inverter is constantly synchronised in frequency with the auxiliary mains to enable load transfer (due to an overload or inverter shutdown) without any break in the power supply to the load.

The battery charger supplies the energy required to maintain or recharge the battery.

- **Bypass mode**

In the event of inverter failure, the load is automatically transferred onto the auxiliary mains without any interruption in the power supply.

This procedure may occur in the following situations:

- in the event of a temporary overload, the inverter continues to power the load. If the condition persists, the UPS output is switched
- on to the auxiliary mains via automatic bypass. Normal operation, which is from the inverter, returns automatically a few seconds after the overload disappears.
- when the voltage generated by the inverter goes outside the limits due to a major overload or a fault on the inverter.
- when the internal temperature exceeds the maximum value allowed.

- **Battery mode**

In the event of a mains failure (micro interruptions or extended power cuts), the UPS continues to power the load using the energy stored in the battery.

9.2 High efficiency mode

The UPS has a selectable, programmable economy operating mode (ECO MODE) that can increase overall efficiency by up to 99% for energy saving purposes. If the power supply fails, the UPS will automatically switch onto the inverter and continue to supply power to the load by drawing energy from the battery.

This mode does not provide perfect stability in frequency and voltage like the NORMAL MODE. Therefore the use of this mode should be carefully evaluated according to the level of protection required by the application. With the optional board Net Vision specific daily or weekly time intervals can be selected and programmed to power applications directly from the auxiliary mains.

ECO MODE operation provides very high efficiency, since the application is powered directly from the auxiliary mains via the automatic bypass under normal operating conditions.

To activate follow the correct procedure in the control panel.

9.3 Operation with motor generator (GENSET)

The UPS can be operated in conjunction with a generator (GENSET) over the ADC+SL card (refer to 'Standard features and options' chapter). With a generator, the frequency and voltage ranges of the auxiliary mains can be increased to accept the instability of the GENSET and at the same time to avoid operation from the battery or risks of out-of-synchronisation switching on to the bypass.

10. Standard features and options

Availability	
●	*Factory-installed option*
○	*Available as option*
–	*Not available*

Features	MODULYS GP	Compatibility
Communication Option		
ADC+SL card	○	
Temperature sensor	○	⚠ ❗ ADC+SL card
Net Vision card	○	
EMD	○	⚠ ❗ Net Vision card
Li-ion battery interactivity kit	○	⚠ ❗ ADC+SL card
IOT kit	○	
Mechanical Option		
Top air exhausted	○	
Seismic adaptation kit	○	

❗ *Required option*

🚫 *Incompatible option*

10.1 ADC+SL card

The ADC+SL (Advanced Dry Contact + Serial Link) is a slot optional board that provides:

- 4 relays for external device activation (can be set as normally closed or normally open).
- 3 free inputs to report external contacts to UPS.
- 1 connector for external battery temperature sensor (optional).
- RS485 insulated serial link providing MODBUS RTU protocol.
- 2 LEDs indicating board status.

The board is plug&play: the UPS is able to recognise its presence and configuration (up to 4 standard operating modes can be selected by the display) and manages the ADC+SL outputs and the inputs accordingly. It is possible to create a custom operation mode through after sales service.

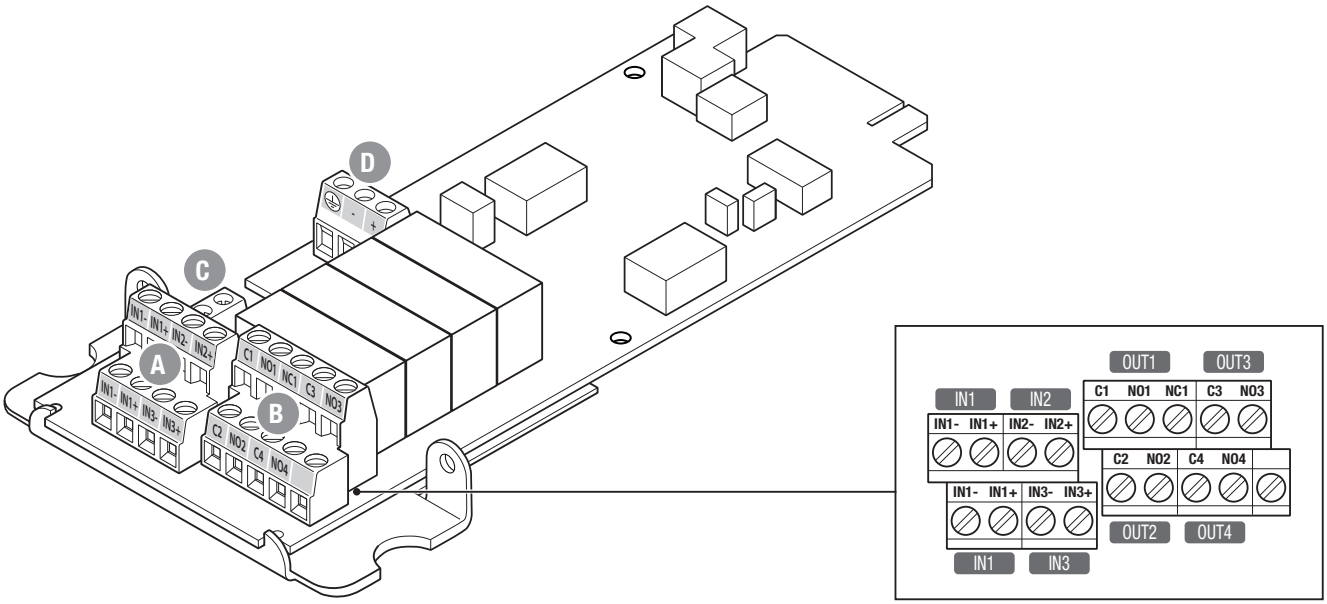

KEY

A 3 free inputs to link external contacts to UPS.

B 4 relays for external device activation.

C 1 connector for external temperature sensor.

D RS485 insulated serial link.

⚠	NOTE! **If the board is removed while operating, an alarm is flagged on the control panel.** **Perform an “Alarm reset” control to cancel it.**

Input

- Free voltage loop.
- INx+ has to be connected to INx- to close the loop on XB4 connector.
- Voltage Free Connection has to be used. Voltage from the circuit must be isolated from the input terminals (do not apply voltage to the input).
- IN1 is duplicated, giving the possibility to link the UPS POWER OFF signal to other equipment, for example.

Relay outputs

- Contact voltage guaranteed at 277 V (AC) / 25 V (DC) – 4 A (for higher voltage, please contact the manufacturer).
- Relay 1 gives the possibility of choosing between normally closed (NC1) or normally open (NO1) position. Relays 2, 3 and 4 only have normally open position (NOx).
- On connector XB3, Cx means common, NOx means normally open position.

STANDARD configuration (default)					
IN/OUT	DESCRIPTION	ACTIVATION DELAY (s)	REMARK(1)	INPUT TYPE	STATE
IN1	UPS POWER OFF	1	Command sent to UPS(2)	Close to activate	Normally open
IN2	GEN SET ON	1	Activate S023 status	Open to activate	Normally close
IN3	INSULATION FAULT	10	Activate A026	Open to activate	Normally close
RELAY 1	GENERAL ALARM	10	(NC1 or NO1 position can be chosen) Relating to A015		Normally open/close
RELAY 2	OPERATING ON BATTERY	30	Relating to A019		Normally open
RELAY 3	END OF BACK-UP TIME	10	Relating to A017		Normally open
	IMMINENT STOP	10	Relating to A000		Normally open
RELAY 4	LOAD SUPPLIED BY AUTO-MATIC BYPASS	10	Relating to S002		Normally open

OPTIONS SUPERVISOR configuration					
IN/OUT	DESCRIPTION	ACTIVATION DELAY (s)	REMARK(1)	INPUT TYPE	STATE
IN1	UPS POWER OFF	1	Command sent to UPS(2)	Close to activate	Normally open
IN2	FAN FAILURE	10	Activate A054	Close to activate	Normally open
IN3	BATTERY DISCONNECT	10	Activate A016	Open to activate	Normally closed
RELAY 1	GENERAL ALARM	10	(NC1 or NO1 position can be chosen) Relating to A015		Normally open/close
RELAY 2	OPERATING ON BATTERY	30	Relating to A019		Normally open
RELAY 3	REDUNDANCY LOST	10	Relating to A006		Normally open
RELAY 4	BATTERY DISCONNECTED	1	Relating to A016		Normally open

SAFETY configuration					
IN/OUT	DESCRIPTION	ACTIVATION DELAY (s)	REMARK(1)	INPUT TYPE	STATE
IN1	UPS POWER OFF	1	Command sent to UPS(2)	Close to activate	Normally open
IN2	INSULATION FAULT	1	Activate A026	Open to activate	Normally close
IN3	CHARGER DISABLE/ENABLE	10	Command sent to UPS(2)	Open to activate	Normally close
RELAY 1	GENERAL ALARM	10	(NC1 or NO1 position can be chosen) Relating to A015		Normally open/close
RELAY 2	UPS POWER OFF	1	Relating to A059		Normally open
RELAY 3	END OF BACK-UP TIME	10	Relating to A017		Normally open
	IMMINENT STOP	10	Relating to A000		Normally open
RELAY 4	INSULATION FAULT	1	Relating to A026		Normally open

ENVIRONMENTAL configuration					
IN/OUT	DESCRIPTION	ACTIVATION DELAY (s)	REMARK(1)	INPUT TYPE	STATE
IN1	UPS POWER OFF	1	Command sent to UPS(2)	Close to activate	Normally open
IN2	PROGRAMMABLE ALARM	10	Activate A064	Open to activate	Normally close
IN3	BATTERY TEMPERATURE ALARM	10	Activate A020	Open to activate	Normally close
RELAY 1	GENERAL ALARM	10	(NC1 or NO1 position can be chosen) Relating to A015		Normally open/close
RELAY 2	BATTERY TEMPERATURE ALARM	10	Relating to A020		Normally open
RELAY 3	REDUNDANCY LOST	10	Relating to A006		Normally open
RELAY 4	PROGRAMMABLE ALARM	10	Relating to A064		Normally open

1. The acronyms mentioned are linked to MODBUS table (Snnn=Status/Annn=Alarm).

2. A self-locking emergency push button must be used for the UPS Power Off input.

Note: custom configuration is also available. For more information contact Socomec.

Custom ADC+SL configuration for remote signal box management

In addition to the four standard configurations a customized configuration is available to manage the remote SIGNALLING BOX OPTION.

SIGNALLING BOX OPTION configuration					
IN/OUT	DESCRIPTION	ACTIVATION DELAY (s)	REMARK[1]	INPUT TYPE	STATE
IN1	UPS POWER OFF	1	Command sent to UPS[2][3]	Open to activate	Normally Close
IN2	NOT USED	-	-		
IN3	NOT USED	-	-		
RELAY 1	REQUEST TECHNICAL AS-SISTANCE	1	Relating to a list of technical alarms		Normally closed
RELAY 2	BATTERY DISCHARGING	10	Relating to A019		Normally open
RELAY 3	END OF BACK-UP TIME	1	Relating to A017		Normally open
	IMMINENT STOP		Relating to A000		
RELAY 4	NORMAL OPERATION	1	Relating to S000		Normally open

1. *The acronyms mentioned are linked to MODBUS table (Snnn=Status/Annn=Alarm).*
2. *A self-locking emergency push button must be used for the UPS Power Off input.*
3. *Jumper is supplied to close the contact if needed.*

Rs485 serial link

- Insulated RS485, protected against over voltage. Only for local bus purposes; maximum ~500 m.
- Pull up and pull down line resistor XJ1 (failsafe biasing): jumper open by default.
- Possibility of fixing the RS485 cable to the board.
- Cable type required: twister pair cable + shield to connect to ground. (AWG 24, 0.2 mm^2 for example).

The INPUT and RELAYS are managed with information coming from the UPS.

NOTE!
Inputs and relays can be re-programmed depending on requirements.
Contact your SOCOMEC after-sales service to change Input/Output programming.

Information coming from inputs can be reported in the UPS database for display on the mimic panel and is accessible on the MODBUS table.

The UPS can manage up to two ADC+SL option cards. The cards can be re-programmed for other uses.

In this specific case, the 2 serial links (SLOT 1 and SLOT 2) are independent.

Modbus serial link

The RS485 provides MODBUS RTU protocol.

The description of MODBUS addresses and UPS database are described in the MODBUS user manual. All manuals are available on SOCOMEC's web site (www.socomec.com).

Serial link settings

COM1 relates to serial port on board in SLOT 1.

COM2 relates to serial port on board in SLOT 2.

Settings are available via the mimic panel to configure:

- Baud rate: 2400, 9600, 19200.
- Parity: None, Even, Odd.
- MODBUS slave number: 1 to 32.

Board status

Board presence is reported through status S064 for slot 1 and S065 for slot 2.

In the case of board failure, 'Option board alarm' (A062) occurs to prevent malfunctioning.

10.1.1 Temperature sensor

The temperature sensor can be used to monitor the battery temperature.

The ADC+SL card can be ordered with or without the temperature sensor in kit.

If the sensor is present, temperature values are available on MODBUS protocol at following addresses:

Temperature board		
Slot 1	0xn0AF[1]	Format ##
Slot 2	0xn0AE[1]	Format ##

1. n = unit number

Temperature range: 0 °C to 40 °C.

10.2 Net Vision card

NET VISION is a communication and management interface designed for business networks. The UPS behaves exactly like a networked peripheral, it can be managed remotely, and allows the shutdown of network workstations.

NET VISION allows a direct interface between the UPS and LAN network avoiding dependence on the server and support SMTP, SNMP, DHCP and many other protocols. it interacts via the web browser.

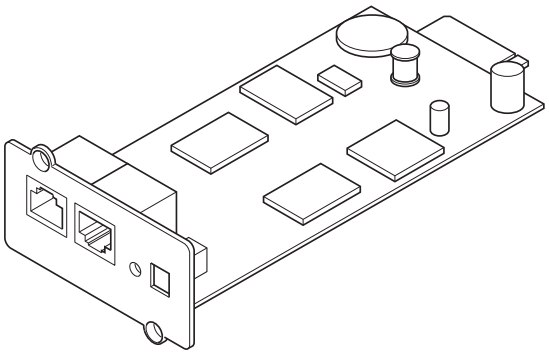

10.2.1 EMD

EMD (Environmental Monitoring Device) is a device to be used in conjunction with the NET VISION interface and provides the following features:

- temperature and humidity measurements + dry contact inputs,
- alarm thresholds configurable via Web browser,
- notification of environmental alarm via email and SNMP traps.

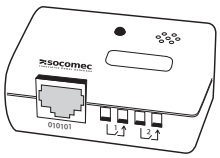

10.3 Li-ion battery interactivity kit

This kit is designed to implement interactive UPS-Li-Ion battery control.

The interactive control system checks and manages all Li-Ion cell parameters (i.e. temperature, voltage, current, charging status, etc.) and dynamically adapt how the UPS operates depending on the status of the Li-Ion battery.

UPS interaction guarantees the most reliable performance and improves system availability by:

- Ensuring proper Li-Ion battery control,
- Preventing any irreversible overcharge failure,
- Performing automatic corrective actions in the event of critical conditions that may affect battery performance.

⚠	NOTE! **If Li-Ion batteries are connected in parallel, with a multiple BMS setup, the Li-Ion battery option will require a single connection to a concentrator to operate, which acts as the master BMS.**
⚠	**The UPS interface to the Li-ion batteries (LIB), which could be based on a communication protocol or on dry contacts, monitors battery operation for the sole purpose of ensuring overall system service. This UPS battery interface cannot in any way replace safety systems to protect the battery against abuse or improper use, which requires an independent system in compliance with the relevant standards.**

10.4 Top air exhausted

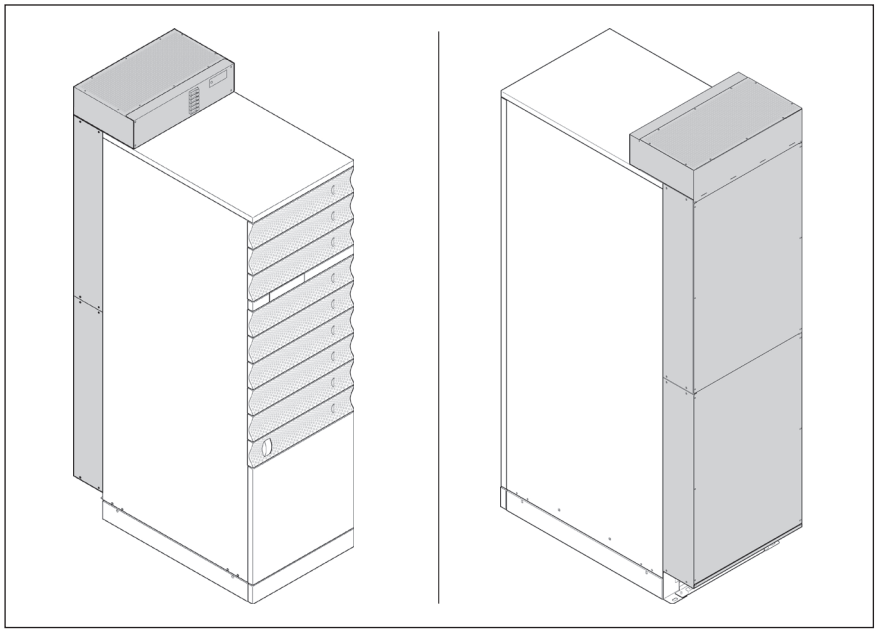

11. Troubleshooting

The alarm messages displayed enable immediate diagnosis.

Alarms are divided into two categories:

- Alarms relating to external UPS circuits: input mains, output mains, temperature and environment.
- Alarms relating to internal UPS circuits: in this case corrective action will be carried out by the After Sales Department.

The USB report makes it possible to have full information on what occurred. Refer to 'Display operation' chapter.

For other alarms that may appear please contact the Service Dept.

11.1 System alarms

A000	IMMINENT STOP	An imminent stop is about to happen. In few minutes the UPS will be shut down. This can be caused by a critical alarm or a user request.
A001	OVERLOAD ALARM	The load is exceeding the UPS power specification. The machine will turn off. Reduce the load immediately.
A002	AMBIENT TEMPERATURE ALARM	Environmental temperature is greater than 65°C.
A003	TRANSFER LOCKED	The UPS is unable to transfer the load between bypass and inverter.
A004	TRANSFER IMPOSSIBLE	Bypass is not available.
A005	INSUFFICIENT RESOURCES	Some components are not operational.
A006	REDUNDANCY LOST	The redundant Unit is not available. Check individual unit alarms to locate which is excluded from the System.
A007	OUTPUT SHORT CIRCUIT DETECTION	A short circuit is detected on the output. Please contact the Service Dept.
A008	ECO MODE DISABLED BY UPS	Eco mode is disabled due to bypass failure.
A009	ENERGY SAVER DISABLED BY UPS	An event has occurred forcing the UPS to stop the energy saver function.
A012	MAINTENANCE ALARM	UPS needs routine maintenance. Please contact the Service Dept.
A013	REMOTE SERVICE ALARM	UPS needs immediate maintenance. Please contact the Service Dept.
A014	REMOTE SERVICE PREVENTIVE ALARM	A non-critical alarm is present. Please contact the Service Dept.
A015	GENERAL ALARM	An alarm is present.
A016	BATTERY DISCONNECTED	The battery is not connected to the UPS.
A017	BATTERY DISCHARGED	The battery charge level is below the minimum value.
A018	END OF BACK-UP TIME	Supply from batteries is close to finishing.
A019	OPERATING ON BATTERY	The UPS is running on battery. Load is supplied by batteries.
A020	BATTERY TEMPERATURE ALARM	Battery temperature is greater than the threshold. If temperature is measured using ADC+SL, verify NTC is still connected, otherwise, check the internal UPS temperature.
A021	BATTERY ROOM ALARM	The battery cabinet temperature is too high.
A022	BATTERY TEST FAILED	The battery has failed the last battery test.
A026	INSULATION FAULT	There is an insulation problem with the plant. Verify input from ADC+SL.
A027	BATTERY ALARM	A battery alarm is present. Maximum recharging time at two levels, or slow discharging time protection has occurred.
A032	RECTIFIER CRITICAL ALARM	There is a problem with the rectifier. Please contact the Service Dept.
A033	RECTIFIER PREVENTIVE ALARM	There is a non-critical problem with the rectifier. Check the fans are working properly or the input SPD. Please contact the Service Dept.

A035	RECTIFIER INPUT SUPPLY NOT OK	The input mains supply is out of tolerance. Verify that the input voltage and frequency are within the UPS ratings.
A037	CHARGER CRITICAL ALARM	There is a problem with the battery charger. Please contact the Service Dept.
A038	CHARGER PREVENTIVE ALARM	Battery charger was blocked by a critical alarm, or Battery Voltage is too low after 16 hours of charging.
A040	INVERTER CRITICAL ALARM	There is a problem with the inverter. Please contact the Service Dept.
A041	INVERTER PREVENTIVE ALARM	There is a non-critical problem with the inverter. Check the fans are working properly. Please contact the Service Dept.
A043	INVERTER IMMINENT STOP	Imminent redundancy was lost due to overload, unit imminent stop, etc.
A048	BYPASS CRITICAL ALARM	There is a problem with the bypass. Please contact the Service Dept.
A049	BYPASS PREVENTIVE ALARM	There is a non-critical problem with the bypass. Please contact the Service Dept.
A050	BYPASS INPUT SUPPLY NOT OK	The auxiliary supply is out of tolerance. Verify that the input voltage and frequency are within the UPS ratings.
A051	PHASE ROTATION FAULT	The auxiliary mains is not connected properly. Please check phase connection order is correct.
A052	BYPASS BACK-FEED DETECTION	There is a backfeed problem with the bypass. Please contact the Service Dept.
A054	FAN FAILURE	Fan Failure can generate overheating. Please contact the Service Dept.
A055	ACS ALARM	Communication between ACS and Inverter is lost.
A056	MAINTENANCE BYPASS ALARM	Output and Maintenance ByPass switches are closed at the same time.
A057	INTERNAL BACKFEED DETECTION	There is a backfeed problem with the rectifier. Please contact the Service Dept.
A059	UPS POWER OFF	The UPO emergency input on ADC+SL has been activated.
A060	WRONG CONFIGURATION	UPS is not configured properly. Please check the configurations or contact the Service Dept.
A061	INTERNAL / COMMUNICATION FAILURE	The internal communication between UPS sub-system is lost. Please contact the Service Dept.
A062	OPTION BOARD ALARM	There is a communication problem with the option board. Please contact the Service Dept.
A063	SPARE PARTS NOT COMPATIBLE	Spare parts are not registered on the UPS or are not compatible.

11.2 System status

S002	LOAD SUPPLIED BY AUTOMATIC BYPASS	Load on bypass, supplied by auxiliary mains. Load not protected.
S018	EXTERNAL MAINTENANCE BYPASS CLOSED	External maintenance bypass input is closed.
S023	GEN SET ON	Genset input.
S064	CARD IN SLOT 1 PRESENT	
S065	CARD IN SLOT 2 PRESENT	
S066	CARD IN SLOT 3 PRESENT	

12. Preventive maintenance

⚠	NOTE! **Before carrying out any operations on the unit read the 'Safety standards' chapter carefully.**
⚠	NOTE! **Any work carried out on the equipment must be performed by qualified technicians authorised by SOCOMEC.**

Routine maintenance carried out annually is recommended in order to provide optimum operating efficiency and avoid equipment downtime.

Maintenance consists of thorough functionality checks on:

- electronic and mechanical parts;
- dust removal;
- battery inspection;
- software updating;
- environmental checks.

12.1 Batteries

The condition of the battery is fundamental to UPS operation.

During the operating lifetime of the battery, the UPS stores statistics on the conditions of use of the battery for analysis.

Expected battery lifetime is very much dependent on operating conditions:

- number of charging and discharging cycles;
- load rate;
- temperature.

⚠	NOTE! **Batteries must only be replaced with batteries recommended or sold by the manufacturer.** **Batteries must only be replaced by qualified technicians.**
⚠	BEWARE! **Used batteries contain harmful substances. Do not open the plastic cover!**
⚠	NOTE! **Used batteries have to be placed in the appropriate containers to avoid leakage acid.** **They should only be entrusted to a specialist waste disposal company.**

12.2 Fans & capacitors

The lifespan of consumable parts such as fans and capacitors (AC and DC) depends on whether or not the use and environmental conditions (premises, usage or load type) are abnormal or harsh for the equipment.

It is advisable to replace consumables as follows[1]:

Consumable part	Years
Fan	5
AC and DC capacitor	7

1. Based on operation of the unit according to the manufacturer's specification.

13. Safeguarding the environment

Do not dispose of electrical appliances with normal waste, use separate collection facilities.

Follow local council waste regulations for proper disposal arrangements to reduce the environmental impact of waste electrical and electronic equipment or contact your local government for information regarding the collection arrangements available.

If electrical appliances are disposed of in landfills or dumps, hazardous substances can leak into the groundwater and get into the food chain, damaging health and wellbeing. Depleted batteries are considered as toxic waste. When battery replacement becomes necessary, only give rundown batteries to certified and licensed waste disposal companies. In accordance with local legislation, it is prohibited to dispose of batteries together with other industrial waste or household refuse.

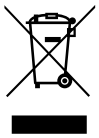

The crossed-out trash bin symbol is placed on this product to encourage users to recycle components and units whenever possible. Please be environmentally responsible and recycle this product through your recycling facility at the end of its lifetime.

For any questions regarding the disposal of the product, contact local distributors or retailers.

14. Technical specifications

Number of modules			1	2	3	4	5
Power		kW	25	50	75	100	100
Power		kVA	25	50	75	100	100
Input							
Input mains voltage			3ph 480 V (+15/-15%) up to -40% @ 50% of nominal load				
Input mains frequency		Hz	60 +/-10%				
Input power factor			≥ 0.99[1]				
Total harmonic input current distortion (THDi)			≤ 3% (@: Pn, Resistive load, Mains THDv ≤ 1%)				
Output							
Output voltage (three phase)		V	480				
Frequency		Hz	60				
Total output voltage distortion (THDv)		%	≤ 1% (@ Pn, Resistive load)				
Overload[2]		%	125% for 10 minutes, 150% for 1 minute				
Overload[2]	10 min	kW	125				
	1 min	kW	150				
Crest Factor			≥ 2.7				≥ 3.3
Bypass							
Bypass input voltage		V	Nominal output voltage ±15%				
Bypass input frequency		Hz	60 +/-2% selectable (±8% if GENSET is used)				
Stored energy mode of operation							
Number of battery blocks (VRLA)			From 18+18 to 24+24				
Environmental							
Operating temperature		°F / °C	32 to 104 °F / 0 to +40 °C[3][4]				
Storage temperature		°F / °C	23 to 122 °F / -5 to +50 °C				
Relative humidity		%	95% condensation-free				
Altitude (max)		ft	3280 (9840 with derating)				
Acoustic noise at 1m		dBA	≤ 58				
Required air capacity		CFM	1178				
Dissipated power (max)		W	5200 @ Pn (3000 @ 56 kW)				
Dissipated power (max)		BTU/h	17750 @ Pn (10250 @ 56 kW)				
Dimensions and Weight							
Dimensions (W x D x H)		ft.	2' 2" 39/64 x 2' 11" 7/16 x 6' 6" 15/32				
		mm	676 x 900 x 1993				
Empty cabinet		lbs / kg	1043 lbs / 473 kg				
UPS module		lbs / kg	75 lbs / 34 kg				
Bypass module		lbs / kg	55 lbs / 25 kg				
Battery module		lbs / kg	-[5]				
Standard							
Safety			UL1778 CSA C22.2 N. 107.3-05				
EMC			FCC part15 Class A				
Performance			IEC 62040-3 (VFI-SS-111)				
Degree of protection standard			NEMA 1 (IP20)				
SEISMIC			OSHPD Pre-approval (optional)				

1. *mmPout ≥ 50% Sn.*
2. *Initial Condition Pout ≤ 80% Pn.*
3. *For best battery lifetime the suggested temperature range is 59 °F ÷ 77 °F.*
4. *According to IEC62040-3.*
5. *Modular battery cabinet.*

Socomec: our innovations supporting your energy performance

1 independent manufacturer

3,600 employees worldwide

10 % of sales revenue dedicated to R&D

400 experts dedicated to service provision

Your power management expert

POWER SWITCHING

POWER MONITORING

POWER CONVERSION

ENERGY STORAGE

EXPERT SERVICES

The specialist for critical applications

- Control, command of LV facilities
- Safety of persons and assets
- Measurement of electrical parameters
- Energy management
- Energy quality
- Energy availability
- Energy storage
- Prevention and repairs
- Measurement and analysis
- Optimisation
- Consultancy, commissioning and training

A worldwide presence

12 production sites
- France (x3)
- Italy (x2)
- Tunisia
- India
- China (x2)
- USA (x3)

28 subsidiaries and commercial locations
- Algeria • Australia • Belgium • China • Canada
- Dubai (United Arab Emirates) • France • Germany
- India • Indonesia • Italy • Ivory Coast • Netherlands
- Poland • Portugal • Romania • Serbia • Singapore
- Slovenia • South Africa • Spain • Switzerland
- Thailand • Tunisia • Turkey • UK • USA

80 countries where our brand is distributed

Sales offices

IOMMODGPXXO9-EN 08 07.2022

HEAD OFFICE

SOCOMEC GROUP
SAS SOCOMEC capital 10 646 360 €
R.C.S. Strasbourg B 548 500 149
B.P. 60010 - 1, rue de Westhouse
F-67235 Benfeld Cedex
Tel. +33 3 88 57 41 41 - Fax +33 3 88 57 78 78
info.scp.isd@socomec.com

YOUR DISTRIBUTOR / PARTNER

www.socomec.com

100 years OF SHARED ENERGY 1922 — 2022

socomec Innovative Power Solutions

Non contractual document. © 2022, Socomec SAS. All rights reserved. - Document printed on paper from sustainably managed forests.